LIBRARY RESOURCES & TECHNICAL SERVICES

Vol. 11, No. 2 *Spring, 1967*

CONTENTS

	Page
The Union List of Serials: Third Edition. *F. Bernice Field*	133
The Consumer Survey of New Serial Titles. *A. F. Kuhlman*	138
The Mechanization of the Filing Rules for the Dictionary Catalogs of the Library of Congress. *William R. Nugent*	145
Revision of the Current Library of Congress Catalog Card Format. *Henry Voos*	167
Bridging the Gap Between Cataloging and Information Retrieval. *Doralyn J. Hickey*	173
Computer-Produced Book Catalogs: Entry Form and Content. *Edward A. Weinstein and Virginia George*	185
Automated Acquisitions Procedures at the University of Michigan Library. *Connie Dunlap*	192
The International Bookseller Looks at Acquisitions. *Dominick Coppola*	203
The Antiquarian Reprint Dealer Looks at Acquisitions. *Frederick Altman*	207
Microreproduction Information Sources. *Albert Diaz*	211
The Automatic Ordering of Replacement Titles for Libraries in Metropolitan Toronto. *Evelyn Thompson and George Forrester*	215
The National and International Standardization of Book and Periodical Publishing Statistics. *Frank L. Schick*	221
Lending to Reprinters. *Reprinting Committee*	229
Reclassification at the University of Maryland. *William E. Connors*	233
Long Files Under LC Subject Headings, and the LC Classification. *Sidney L. Jackson*	243
In the Mail: Classification. *Jean M. Perreault*	245
Predicting the Need for Catalog Expansion. *Fred Heinritz*	247
Reviews.	249

ALA RESOURCES AND TECHNICAL SERVICES DIVISION

EDITORIAL BOARD

Editor, and Chairman of the Editorial Board ..... (To Be Appointed)

Assistant Editors:

RICHARD M. DOUGHERTY ..... for Acquisitions Section

PAUL S. DUNKIN
for Cataloging and Classification Section

WILLIAM H. HUFF ..... for Serials Section

ALLEN B. VEANER ..... for Copying Methods Section

Editorial Advisers:

Maurice F. Tauber (for Technical Services)
Louis A. Schultheiss (for Regional Groups)

Managing Editor (and Editor for this issue) ..... DORALYN J. HICKEY

Business Assistant:

David Turiel (for Advertising)

Circulation Manager: ..... MRS. ELIZABETH RODELL

Library Resources & Technical Services, the quarterly official publication of the Resources and Technical Services Division of the American Library Association is published at 2901 Byrdhill Road, Richmond, Va. 23205. *Editorial Office (temporary):* School of Library Science, University of North Carolina, Chapel Hill, N.C. 27514. *Circulation and Business Office:* 50 E. Huron St., Chicago, Ill. 60611. *Subscription Price:* to members of the ALA Resources and Technical Services Division, $2.00 per year, included in the membership dues; to nonmembers, $5.00 per year, single copies $1.25, orders of five or more copies (same issue or assorted), $1.00 each.

"Second-class postage paid at Richmond, Va., and at additional mailing offices."

LRTS is indexed in *Library Literature* and in *Library Science Abstracts.* Its reviews are included in the *Book Review Digest* and *Book Review Index.*

Editors: Material published in *LRTS* is not copyrighted. When reprinting the courtesy of citation to the original publication is requested. Publication in *LRTS* does not imply official endorsement by the Resources and Technical Services Division nor by ALA, and the assumption of editorial responsibility is not to be construed necessarily as endorsement of the opinions expressed by individual contributors.

The Union List of Serials: Third Edition

F. BERNICE FIELD, *ALA Representative*
Joint Committee on the Union List of Serials
1956-1966

THE PUBLICATION of the third edition of the *Union List of Serials* in 1966 is a milestone in the bibliographical control of serial publications and in access to them. Long recognized as an indispensable tool of the library profession, the *Union List of Serials* is the most comprehensive and authoritative publication in existence for information about serial titles—their history, changes of title, suspensions, etc., and the major source of information about the locations of these publications in libraries of the United States and Canada. The third edition, which adds a significant number of titles to those included in earlier editions and updates holdings information within prescribed limitations, makes the record of serials which began publication before January 1, 1950, and are within the defined scope of this publication as complete as available information permitted.

History of Union List Activity

The appearance of this new edition marks the culmination of a long period of activity in the field of serial control, which began in 1913 with the appointment by ALA of a Committee on a Union List of Serials. Not until 1921, however, was the interest in such a publication translated into action when ALA voted at its Midwinter Meeting to accept a plan proposed by H. W. Wilson for compiling a national union list of serials that would give holdings of the major libraries of the United States and Canada. At Mr. Wilson's request a new Advisory Committee on the Union List of Serials was appointed to assist and advise the Wilson Company in the planning of this new publication.

Between that time and 1953, two editions of the *Union List of Serials* and two supplements to each edition appeared; and the ALA Advisory Committee had been succeeded by the Joint Committee on the Union List of Serials, which eventually included representatives of eighteen library associations and other interested organizations. The publication had had three different editors, and both the number of titles and the number of libraries contributing information had increased markedly.

From the beginning, the types of serials included in the *Union List* had been restricted by financial limitations. The first edition, which was supported largely through advance subscriptions from forty-one libraries, listed the categories that had been omitted, among which perhaps the most important were government publications, American newspapers and foreign newspapers after 1820, publications of national

and international congresses and conferences, publications of many state and local organizations, law reports and digests, and annuals. In the second edition the scope was expanded to include certain types of annual publications, numbered monograph series, and other selected categories. Because the *Union List* was thus limited, several separate publications covering various kinds of serials not included had been issued during this period: the *List of Serial Publications of Foreign Governments, 1821-1936,* in 1937; *American Newspapers, 1821-1936,* also in 1937; *International Congresses and Conferences, 1840-1937,* in 1938. All of these together did not cover the serial field comprehensively, however. Furthermore, they were all non-current, they varied greatly in the completeness of information presented, and there was no provision for updating them on a regular basis. Clearly there was need for a better means of recording serials information and holdings and keeping the information current.

The establishment of many new universities, and especially new graduate schools, in the period following the second World War, the explosive growth in the number of serial publications, and the pressing need for researchers to have ready access to them also created strong pressure for action, particularly for the reprinting of the second edition of the *Union List of Serials,* which was out of print, and the compilation of a third edition that would add titles not included in the earlier editions and would give holdings on a broader geographical basis.

The initiation in 1951 by the Library of Congress of a publication entitled *Serial Titles Newly Received* brought a new element into the picture of serial control. A bibliography of serials that were received at the Library of Congress and began publication in 1950 or later, the new publication was much more inclusive in its coverage than the *Union List of Serials.* When in 1953, with the support and cooperation of the Joint Committee on the Union List of Serials, it expanded its scope to include the serial acquisitions of libraries other than the Library of Congress and changed its name to *New Serial Titles,* it became in effect a current supplement to the *Union List of Serials.*

In 1956 the Joint Committee decided that, before making any further plans, a survey of the entire field of serial control and access should be made, with the purpose of developing a plan which would not only include the listing of all serial titles of any importance but would also be permanent and self-sustaining so that the work of obtaining the information from libraries would not have to be repeated. With a grant from the Rockefeller Foundation, the Joint Committee appointed Wyllis E. Wright, Chairman of the Committee that had produced the second edition of the *Union List of Serials* and a former chairman of the Joint Committee, to conduct the study. The proposed program, issued in the spring of 1957, outlined plans for the creation at the Library of Congress of a union catalog of serials, as inclusive as possible. It specified that the files should be so prepared that various lists, including third and later editions of the *Union List of Serials,* could be pub-

lished from them, and they could be used directly by libraries to obtain information. The plan also provided for a reprint of the second edition which would consolidate the entries in that publication and its two supplements into one alphabet and reproduce the resulting sheets by photo-offset to serve libraries during the ten years it would take to compile information for the third edition. It further included subsidies to libraries for checking their holdings and a plan for arranging exchanges of fragmentary serial sets among the major libraries in order to consolidate some of the many incomplete sets.

Unfortunately funds for such an extensive project (the Committee had sought $2,673,222) were not forthcoming; thus the Joint Committee had to revise its thinking in the direction of a less comprehensive list. The program that was finally adopted, and for which financial support was secured from the Council on Library Resources two years later, was two-pronged. It provided first for the publication of a third edition of the *Union List of Serials* that would include information regarding serials up to 1950, and, second, for the expansion of *New Serial Titles,* which at that time included only serial titles beginning in 1950 or later, to be a continuing supplement to the third edition. The new edition, therefore, would be the final edition of the *Union List of Serials*; after it went to press, changes in pre-1950 serial titles and new titles of the pre-1950 period would be found in *New Serial Titles.* This plan has remained unchanged; no further editions of the *Union List of Serials* are planned. The Joint Committee recognizes that there is still a wide gap in the bibliographical control of pre-1950 serials because of the limitations of the *Union List*; and it hopes that at some time funds will be available to make the coverage of pre-1950 serials as comprehensive as that of post-1950 serials.

Characteristics of the Third Edition

The third edition is not a complete revision of the second edition; desirable as this would have been, the Joint Committee not only lacked the funds for the editorial work for such a revision, but it also decided that, without being able to compensate libraries for rechecking all the titles in the second edition and its supplements, it could not ask them to undertake this task. It is a reprint in one alphabet of the titles and holdings in the second edition and its supplements, with such major changes in information and holdings as libraries were able and willing to supply. To this have been added nearly 12,000 new titles which began publication prior to 1950 and are within the scope of the *Union List of Serials,* as defined in the second edition; these were gleaned from records in the National Union Catalog, the *Southeastern Supplement to the Union List of Serials,* and reports from participating libraries, including the National Library of Canada. The number of titles included is more than double that of the first edition (156,449 as compared to 75,000), and the number of libraries which contributed information and holdings has risen from 225 to 956. Although every

effort was made to include all pre-1950 titles that were within the scope of the publication, there are omissions. The *Union List of Serials* is only as inclusive as the contributing libraries have made it, for the titles listed are those reported by libraries to the National Union Catalog, the project itself, or to some other source from which titles were selected. It is hoped that libraries will report any omissions which they discover to *New Serial Titles* so that the record for the years before 1950 may be gradually completed.

Only *major* changes in holdings of titles in the second edition and the supplements, such as the transfer or discarding of entire sets, have been recorded. *Additional* locations for serial titles acquired by libraries since the publication of the second edition and its supplements have been recorded only for titles not commonly held and for those which showed poor geographical distribution in the earlier edition.

A section entitled "Explanations" at the beginning of each volume of the new edition explains the features which result from lack of revision of every entry; users should read this carefully and bear them in mind. They should also be aware of the omission of *new* titles in East Asian languages; this was necessary because of the lack of adequate cataloging of these titles in libraries which hold them.

Compilation of the Third Edition

Probably no one but the very able editor of the third edition, Edna Brown Titus, and, to some extent, the members of the Joint Committee, can realize the amount of painstaking, careful work that went into the compilation of this valuable bibliographical tool. Although the original plan was for a cut-and-paste job, using entries from the second edition and its supplements and adding new and changed titles, investigation of the procedures involved led the Library of Congress, which had accepted administrative and operational responsibility for the third edition, to recommend that it be published by the abstracting method used for the production of the new British Museum *General Catalogue of Printed Books*. The details of mounting the entries for photographing, editing final copy on the boards, estimating the size of entries for the abstracting, were tremendous; members of the Committee marvelled at the patience and persistence of Mrs. Titus and her staff in handling these phases of the operation. The proofreading and checking of the editorial work in London over a two-year period by Mrs. Titus required even more patience and attention to detail.* Truly the third edition of the *Union List of Serials* is a monument to the thoroughness and organizational ability of Edna Brown Titus. To her and to John Cronin, Director of the Processing Department, Library of Congress, whose support and imaginative direction made the project possible, goes the gratitude of the entire library profession for making this invaluable bibliographical tool available in a new edition.

* Note: Further details may be found in the Joint Committee's *Final Report on the Third Edition of the Union List of Serials*. Washington, 1966, pp. 44-47.

In Retrospect

With the third edition being the final edition of the *Union List of Serials,* it seems appropriate to look back over the more than fifty years since action toward the publication of a union list of serials began and pay tribute to the many devoted people who made the publication possible.

First, we must recognize the contribution of H. W. Wilson, who presented the plan for the first edition that resulted in action, and of the H. W. Wilson Company, which, through its representative on the Joint Committee, has been a major contributor to the planning and publication of the list. All three editions and the four supplements have been published and distributed by the H. W. Wilson Company.

Second, we recognize the invaluable contributions of the editors, whose careful and scholarly work made each edition and supplement a reliable and important document: Winifred Gregory, who edited the first two editions and set the high standards which successive editions have maintained; Gabrielle Malikoff, editor of the two supplements to the first edition and the first supplement to the second edition; Marga Franck, who was responsible for the second supplement to the second edition; and finally Edna Brown Titus, whose careful work has been cited above.

Third, we pay tribute to the imaginative planning of the committee chairmen: H. W. Lydenberg, Chairman of the Advisory Committee on the Union List of Serials which planned the first edition; James Thayer Gerould, Donald B. Gilchrist, Wyllis E. Wright, and Helmer L. Webb, who successively chaired the advisory committee that produced the second edition; Wyllis E. Wright, Andrew D. Osborn, Frank B. Rogers, and Howard Rovelstad, who have served as chairmen of the Joint Committee on the Union List of Serials. The continued participation of Wyllis E. Wright in union list activities through more than twenty years, his study for the Joint Committee in 1957, and his advice throughout the compilation of the third edition, merit special recognition. Nor should we forget the major contribution of libraries in staff time spent in compiling the information on which the entries in the *Union List* are based; without their devoted efforts there would have been no such publication as the *Union List of Serials.*

New Serial Titles

The Joint Committee hopes that *New Serial Titles,* which now includes reports from 650 libraries, will become an increasingly useful supplement to the *Union List of Serials.* With a grant from the Council on Library Resources, the Committee is presently conducting a study of consumer reaction to this new tool, the results of which will guide them in future planning for the bibliographical control of serials.

The Consumer Survey of New Serial Titles

A. F. KUHLMAN, *Director Emeritus*
Joint University Libraries
and Director, Consumer Survey of New Serial Titles
Nashville, Tennessee

UPON THE COMPLETION and publication of the *Third Edition* of the *Union List of Serials* last summer, the Joint Committee on the Union List of Serials decided to study and evaluate the effectiveness of *New Serial Titles* in "putting the record of serial resources in libraries in the United States and Canada on a continuing basis." The Library of Congress had requested that such a study be made and had offered its cooperation. The Council on Library Resources, Inc. made a grant to finance the project, and the author of this article was asked to conduct the survey.

In his application for the grant the chairman of the Joint Committee, Howard Rovelstad, said in part that—

> the survey would provide valuable information on the effectiveness of NST as a record of serials published in 1950 and later, and on the effectiveness of NST as a tool for locating serials in libraries. One of the questions to be answered concerns the possible inclusion of pre-1950 serials that have been omitted from the *Union List of Serials*. Also questions about the value, use, frequency of issue, and possible changes in the classed subject list need to be considered. The survey would involve an analysis of the serials included, of the types of libraries reporting, and of the number and locations of libraries reporting. Consumer answers to such questions as how is NST used? What should be added? Is it serving fully its purpose? would be sought.

An Advisory Committee for the survey was set up with Karl F. Heumann as chairman (representing the National Research Council on JCULS); John W. Cronin and Robert D. Desmond of the Library of Congress; Samuel Lazerow (representing the Medical Library Association); Howard Rovelstad (Music Library Association) and William J. Welsh of LC. Headquarters for the survey are at the Joint University Libraries, Nashville, Tennessee.

From the outset it was realized that the success of this survey would depend largely upon enlisting the full participation of knowledgeable librarians who have used *New Serial Titles* and who are interested in its improvement as a cooperative enterprise. With this in mind and with the help of an Advisory Committee, the "Prospectus" and "Questionnaire" that follow were prepared. These were sent to the heads of all libraries subscribing to and/or participating in *New Serial Titles* with the request that they have their staff members, who use *New Serial Titles,* fill in the questionnaire and give the Committee the benefit of their ex-

perience as well as suggestions for its improvement as a current union list of serials.

This "Prospectus" and "Questionnaire" are being published in *Library Resources & Technical Services* to bring this consumer survey to the attention of librarians who use *NST* and have an appreciation of its value, its complex problems and what might be done to cope constructively with them. Some of these knowledgeable librarians who have not been consulted on the questionnaire sent to their library may wish to photocopy the questionnaire, fill it in, and send it to the Director of the Survey.

A PROSPECTUS FOR A CONSUMER SURVEY OF NEW SERIAL TITLES

Introduction

Bibliographical control of serial literature is one of the most urgent problems of the library and scholarly world today. It has been estimated that serials at present constitute 75 percent of all publications and that three-fourths of the budgets of research libraries are devoted to them.

To obtain better bibliographical control of serials in libraries, the Joint Committee on the Union List of Serials has undertaken a two-fold program since 1952 in cooperation with the Library of Congress and many other participating libraries.

First, to compile and publish the *Third Edition* of the *Union List of Serials* (*ULS*) to include holdings of serials of American and Canadian libraries that started publication prior to 1950.

Second, to develop *New Serial Titles (NST)* as a comprehensive current and up-to-date union list of serials that started publication after 1949.

Under this plan the *Third Edition of ULS was to become the final one* which would be supplemented currently and continuously by *NST*.

This dual plan was adopted because the Committee realized that while the *ULS* and its *Supplements* had been most useful they had become inadequate to serve present-day research efficiently. They were not sufficiently comprehensive and tended to be out of date before they were published. Also, compiling supplements had become too burdensome. What was needed was a new basic union list of serials and a workable system for keeping it up to date.

The publication of the *Third Edition* of the *ULS* is now an accomplished fact and the Joint Committee feels that a study of *New Serial Titles* based upon a consumer survey would answer fundamental questions relating to its adequacy and possible improvement. The Library of Congress has requested the consumer survey and is cooperating in it. The Council on Library Resources, Inc. has made a grant to make this undertaking possible.

In this survey, questions to which answers should be supplied by the users of *NST* relate to the following problems.

I. *Problems of Scope*

A. *Categories Included and Excluded:* In the *First Edition of the ULS,* serials included were defined as publications not issued by a government agency, appearing at regular periods of less than a year. This ruled out annuals, monograph and government publications, almanacs, law reports, state and local trade union publications, annual denominational reports and many titles which seemed to have limited or ephemeral value.

The scope of the Second Edition of the ULS was enlarged by including:
(1) Annual publications recording progress of research in specialized fields.
(2) Numbered monograph series.
(3) Children's magazines.
(4) Usually discarded magazines known as "pulps" in instances where the run of volumes justified inclusion.

From the outset, *New Serial Titles* has been much broader in scope than the earlier editions of *ULS*.

The definition of "serials" in *NST* has been enlarged to include bulletins, house organs, annuals, foreign government serial publications, administrative reports, local publications, college publications and serials issued by national and international conferences and congresses. Specifically excluded are newspapers, loose-leaf publications and books in parts, municipal government serials, publishers' series, motion pictures and phonograph records.

Although United Nations, United States Federal and state serial publications are listed in *NST*, on the basis of reports from the Library of Congress, holdings or locations of other libraries for these documents are not shown. United Nations, and U. S. Federal documents are held by depository libraries. State documents are held by the Library of Congress and, generally, by the State Library or issuing agency and the Center for Research Libraries.

B. *Scope—Beginning Date of Publication:* To establish a division of labor between the Third Edition of *ULS* and *NST*, the Joint Committee decided that the former include only pre-1950 serials and holdings for them and that the latter include post-1949 titles and holdings.

C. *Scope—Languages: New Serial Titles* includes serials in all languages using the Roman alphabet, and serials not in the Roman alphabet for which a standard transliteration (Cyrillic, Greek, Hebraic, etc.) has been accepted by the American Library Association. Thus, serials published in no major language and very few minor languages are excluded from *NST*.

II. *Contributors*

The response of librarians and their libraries in reporting new serial titles and holdings has been most encouraging. As of December 1965, a total of 681 libraries were reporting to *NST*. The types of libraries and the number of each type reporting were as follows:

Types	*U. S.*	*Canada*	*Total*
College and University	227	30	257
Public	29	8	37
State, National, Provincial	13	11	24
Agriculture, fisheries, forestry	11	6	17
Arts	13	3	16
Business and Economics	20	10	30
Education	3	2	5
History	9	1	10
Law, legislation, international affairs	38	8	46
Medicine, health, dentistry	74	13	87
Military	6	7	13
Science and technology	68	20	88
Theology	42	3	45
Total	553	128	681

The question arises whether these types of libraries are sufficiently representative of all fields of knowledge? This is essential to the usefulness of *NST*.

III. *Locations*

A related problem is the adequacy of the number and geographical distribution of locations reported to expedite interlibrary loans and cooperation in acquisition activities. The Library of Congress is making a strenuous effort to show as many locations as possible. Thus, of the 100,000 titles included in the 1961-64 four-year cumulation, 35,000 were transferred from the 1950-60 cumulation to make revisions in entries and to show more locations.

The question arises as to whether, in order to develop *NST* further, it is necessary to adopt a plan similar to the one used by the Library of Congress in expanding *The Library of Congress Catalog—Books: Authors* into the *National Union Catalog* in order to include reports from other libraries.

In 1955 to implement this project, the Sub-Committee on the National Union Catalog of the ALA Board on Resources, in consultation with the Library of Congress, divided the United States into nine regions corresponding to the census regions. *The goal was to secure at least two locations in each region* for all important books, pamphlets and scholarly monographs for which the cooperating libraries prepared author entries for their own catalogs because no LC cards were available.

It should be possible, through a study of the 1961-64 cumulation, to make a fair judgment on the probable adequacy of the number of locations given and on their geographical distribution. Also, libraries which are being developed in regions not now well represented in *NST*, should be brought into active participation. Only in this manner can *NST* become an evolving comprehensive union list of serials supplementing permanently the *Third Edition* of *ULS*.

IV. *Bibliographical Listing*

The policy of the Library of Congress for listing titles in *NST* is set forth in the "Introduction" to the monthly, annual and other cumulations. In general, serials are listed under entries prepared in accordance with the rules for entry contained in the *A.L.A. Cataloging Rules* (second edition, 1949) following generally the form used in the *ULS*.

In evaluating bibliographical entries in *NST*, it should be remembered that *NST is compiled on a current basis to serve three purposes:* (1) to supply information about new serials promptly as an aid to acquisition; (2) to supply information on locations of serials to expedite interlibrary loans and (3) to supply useful cataloging entries as promptly as possible.

Insofar as available, full information on the issuing body, place and date of publication and beginning date is furnished. If additional data becomes available or are located in the final cataloging by the LC Descriptive Cataloging Division or a contributing library, it will be added when a revised entry is substituted. Since the Descriptive Cataloging Division does not catalog from the first or a single issue of a serial, in most cases, the entries in *NST* are prepared either in the Library of Congress Serial Record Division, prior to their cataloging for printed cards, or by contributing libraries. The Library's official entries for printed cards are prepared in the Descriptive Cataloging Division where the authority cards are made and entries are established after the necessary bibliographic research is done.

The Library of Congress has issued rules for supplying bibliographical entries to *NST*. If participating libraries follow these consistently it would standardize and make more uniform the entries.

V. *Bibliographical Changes in Serials*

A feature which greatly increased the usefulness of *NST* was added by the Library of Congress beginning in January 1955—namely, a separate alphabetized section at the end of the monthly issues, annual and longer cumulations of reported changes in serial titles such as cessations, suspensions, mergers, supersedures and changes in issuing bodies and changes in the form of name of issuing bodies for current serials, regardless of their beginning date of publication. In the quinquennial cumulation (1961-65) this section will be published as a separate volume—volume 3.

VI. *NST in Classed Subject Arrangement*

Another important service was initiated by the Library of Congress in 1955 by publishing separately the monthly issues of *NST* in *Subject Arrangement* by the Dewey Classification numbers. This should enable subscribing libraries to survey for acquisition purposes new serial titles in selected fields without searching the entire alphabetical list. The same new titles that appear in the regular issues of *NST* are listed here.

VII. *Pre-1950 Serials*

Since the publication of the Third Edition of *ULS,* libraries have inevitably acquired or identified a small number of serials within the scope of *ULS,* but not included therein. Also, new academic, public and special libraries are emerging—some in regions now not well represented in *ULS* and *NST.* These libraries will acquire many pre-1950 serial titles.

Another larger "information gap" yawns between the broad *NST* coverage of post-1949 serials and the selected *ULS* coverage of pre-1950 serials.

Finally, there is a gap in respect to the listing of library holdings. The Third Edition of *ULS* (because of budget limitations) added new library locations only if there were fewer than ten locations already in *ULS.* Thus no new library locations have been added to *most ULS* serials since the publication of the First Supplement to the Second Edition.

VIII. *Frequency and Form of Publication*

The pattern of cumulation for *NST* has been this: the alphabetical list has been issued monthly and annually, plus multiannual cumulations for years 1951-53, 1951-55, 1950-60, 1961-64, and the last quinquennial volumes now in press covering 1961-65.

The *Classed Subject Arrangement* has appeared monthly only, the first issue covering January-May, 1955.

It is hoped that the consumer survey of *NST* will indicate how the frequency and form of publication can be improved.

A QUESTIONNAIRE FOR A CONSUMER SURVEY OF NEW SERIAL TITLES

Name of Library: _____

Address: _____

The Thrust of This Survey Is The Usefulness of NST. Full replies are requested on all questions from all libraries that are subscribers to and/or participating libraries in *NST.* Individual libraries will not be identified in the *Report.* Use extra sheets if necessary and *key your answers* with numbering of questions.

I. *Scope,* Prospectus, Sect. I

A. In terms of use in your library, is the subject scope of *NST* satisfactory? Yes_____ No_____ If no, how improve it?

B. Should additional categories be included? Yes_____ No_____ If yes, which?

C. Should any be excluded? Yes_____ No_____ If yes, which?

II. *Contributors,* Prospectus, Sect. II

The enclosed Prospectus shows the *types of libraries* contributing to *NST.* Are these libraries sufficiently representative of all fields of knowledge? Yes_____ No_____ If no, which additional types or subjects are recommended?

III. *Locations,* Prospectus, Sect. III

As *NST* evolves and adds more locations for important titles in each cumulation, does it look to you as if it can meet your interlibrary loan requirements? Yes_____ No_____ If no, how could this need be met?

IV. *Bibliographical Listing,* Prospectus, Sect. IV

A. Considering that the prime purposes of *NST* are: (1) prompt listing of new serials to aid acquisition work; (2) supplying locations for interlibrary loan purposes, and (3) providing correct entries, is the present listing satisfactory? Yes_____ No_____ If no, how improve?

1. Prompt listing
2. Locations
3. Entries

B. As a participating library, do you report all new serials acquired by your library to *NST*? Yes_____ No_____ If no, check types of serials you exclude:

Government publications:_____
International congresses:_____
Monographic series:_____
Ephemera:_____
Local interest materials:_____
Others:_____

C. Any other suggestions for improving bibliographical listing?

V. *Bibliographical Changes,* Prospectus, Sect. V

Are the reported bibliographical changes adequate? Yes_____ No_____ If no, how improve them?

VI. *NST Classed Subject Arrangement,* Prospectus, Sect. VI

Does your library have a subscription? Yes_____ No_____ If yes, how is it used in your library? Acquisition: Yes_____ No_____ Other:

VII. *Pre-1950 Serials,* Prospectus, Sect. VII

Should the following be included in *NST*?

Pre-1950 Serials within the scope of *ULS* but not listed in the Third Edition. Yes_____ No_____
Serials listed in *ULS* for which there are less than ten locations. Yes_____ No_____

Pre-1950 serials within the scope of *NST*. Yes_____ No_____

VIII. *Frequency of issue preferred,* Prospectus, Sect. VIII

A. For alphabetized *NST:* (1) monthly, annually, five year and ten year cumulations as at present? Yes_____ No_____
or,
(2) Monthly, quarterly, annually, five year and ten year cumulations? Yes_____ No_____
(3) Quarterly, semiannually, annually, five year and ten year cumulations? Yes_____ No_____
(4) Other:

B. *Frequency of issue of NST—Classed subject arrangement preferred:*

1. As at present—only monthly? Yes_____ No_____
2. Other cumulations needed—check: quarterly_____ semi-annually_____ annually_____ or longer_____
3. Would your library be interested in proof slip service at possibly $65 annually assuming a minimum of 100 subscribers? Yes_____ No_____
Remarks:

IX. Other Comments

The Mechanization of the Filing Rules for the Dictionary Catalogs of the Library of Congress

WILLIAM R. NUGENT
Vice President, Inforonics, Inc.
Cambridge, Massachusetts

INTRODUCTION

THE MECHANIZATION OF FILING RULES is the next necessary milestone in the continuing application of computers by the library profession. A system of algorithmic filing will permit machine-form bibliographic data to be sorted by computer to produce new files and catalogs of various types that will be ordered according to criteria similar to those prescribed by the Library of Congress in its *Filing Rules for the Dictionary Catalogs*,[1] hereafter cited as *LC Filing Rules.*

The Need for Rigorous Rules

Were this mechanization a straightforward task of programming the existing rules of filing, it would not be of special concern to librarians. The existing rules, unfortunately, are not sufficiently rigorous, and the data operated on are not sufficiently explicit to permit direct programming; and hence modifications and simplifications have to be made to certain of the rules that will consequently change the filing location of associated items. It is felt that any changes made in the filing rules for the purpose of automated ordering must ultimately evolve into a new standard for all filing. Therefore, we have attempted to derive a set of machinable rules that would be acceptable to the library community for general use. The required changes are in the direction of greater consistency and simplicity and generally follow the preferred "Alternate Rules"[2] of LC rather than the older ones.

Converting Filer's Present Inductive Process to an Explicit Annotation of an Entry

Unlike a set of rules for manual filing procedures, mechanized filing rules cannot be established independently of the data recording process. This is because a human filer will apply a wealth of knowledge, induction, and inferential reasoning quite beyond the limits of a practical sorting program. Hence the basic bibliographic data, that is now adequate for a human filer, must be made more explicit for the computer. This requires selective annotation of the bibliographic record at the

* This work was supported by The Council on Library Resources, Inc. under Contract No. CLR-303.

time of original keying. It is primarily for this reason that there is some urgency for the library community to agree upon a set of new standards for mechanized filing, for until this is done, there is little assurance that the machine records now being created will be machine sortable by the filing rules of a future standard.

Effect of Automatic Filing Requirements on Existing Bibliographic Data Recording Projects

Much bibliographic data is beginning to be recorded in machine form, and this data is currently being processed by both special-purpose and general-purpose computers to create sets of catalog cards, book lists, and other items in a variety of output forms: typewriter copy, line printer listings, and printed matter, computer-composed and typeset. The techniques of machine-form recording of bibliographic data and its automated processing have been described by Buckland.[3] The Buckland report stresses the importance of explicit identification of data items at the time of initial recording and describes input typing formats for catalog cards that contain information sufficient to reorganize selectively the bibliographic elements by machine and process them into a variety of printed forms.

The present LC MARC[4, 5] project, to develop and test a fully detailed set of explicitly encoded bibliographic items for a machine catalog record, is another important bibliographic recording project. The MARC project will eventually evolve into a basis for an LC standard, so it is important that what is studied here be pertinent to such a system.

Part of our present task is to determine what additional information is required to enable bibliographic data, recorded by these and other library mechanization projects, to be accurately sorted by machine.

Study Approach

On the following pages we first show how the basic rules would be mechanized, examine successive sections of *LC Filing Rules,* and discuss the additions and modifications necessary to implement these sections. It was not our intention to perform a detailed rewriting of *LC Filing Rules,* but it was rather to analyze the logical structure of these rules to determine their feasibility in an automated system and to propose alternative approaches where necessary.

Our study has shown, in brief, that it is quite feasible to program the bulk of the standards in *LC Filing Rules.*

MECHANIZING THE BASIC RULES OF FILING

We will first treat the most basic rules of filing and demonstrate how mechanization of these rules may be effected. Filing is a complex ordering procedure based on a variety of interrelated criteria of differing degrees of explicitness; sorting is a simple ordering procedure based on a pre-assigned hierarchy of explicit symbols. By mechanization, we mean an algorithmic transformation of bibliographic entries into a

"sort key" such that a symbol-by-symbol sort will yield the proper filing position for that entry.

In the following sections we will follow the same sequence of topics as the *LC Filing Rules* to make comparison easier. The basic rules will be followed completely, and we will treat the other rules as exceptions.

It should be recalled that the *LC Filing Rules* constitute a constructive system in which a body of basic rules are established, and are then augmented or excepted according to the particular form or type of entry. To properly order the exceptions, therefore, requires in general (a) more information about the entry, and (b) more rules. Our program plan follows a similar course of development: the program for the basic rules is described in detail in this section, and the additional entry identifications and program rules required to order the exceptions are discussed in subsequent sections.

The basic rules to be mechanized are:

a. Entries will be filed word-by-word, letter-by-letter, and subdivision-by-subdivision.
b. The initial articles "the," "a," and "an" will be ignored.
c. Punctuation
   (1) The following punctuation marks will be treated as delimiters of subdivisions in the case of place entries and will be taken in the following order:
      1. . □ □ (period space space)
      2. — (dash)
      3. □ ((space left parenthesis)
      4. , □ (comma space)
   (2) The following punctuation marks will be treated as delimiters of subdivisions in the case of subject entries and will be taken in the following order: (Alternate LC rules for items 2 and 3.)
      1. — (dash)
      2. , □ (comma space)
      3. □ ((space left parenthesis)
   (3) The above punctuation marks will be treated as equivalent delimiters of subdivisions in all other entries except title entries.
   (4) Punctuation will not be recognized as subdivision delimiters in the case of title entries, periodicals excepted.
d. Entries that are identical up to the point of subarrangement, and which denote different things, will be arranged according to the kind of thing.
      1. Person
      2. Place
      3. Thing
      4. Title
e. Entries, other than place entries, that are identical and denote

the same thing will be arranged according to the type of entry.
   1. Main
   2. Added
   3. Subject

f. In the case of place entries that are identical and denote the same thing, the order will be:
   1. Main
   2. Added
   3. Institutions and agencies with their added entries and subjects
   4. Place as subject entry.

Input Record

In creating a machine-form input record of the catalog data, the entry data must contain sufficient information to enable identification of the criteria of the above rules. Four classes of information items are used.

a. Identification of Entry Type
   Main
   Added
   Subject
b. Identification of Entry Referent
   Person
   Place
   Thing
   Title [Anon. classic, periodical, other]
c. Substitution of Filing Form of Entry, or Part, if needed.
   Substitute full form of abbreviations, indicate deletion of ignored parts, rectification of compound words, etc.
d. Language of Publication, if not English.

Entry Type and Referent. While we are not concerned here with the format in which the entry is keyed, it is obvious that entry type and referent identification may be readily made by check-boxes adjacent to the entries, and the entry type could be an explicit function of the entry's location in the format.

Substitution of Filing Forms. By including a provision for the substitution of filing forms, we are well along towards requiring a filer to participate in the data preparation. This will be necessary to some degree in any system but has special benefits in initial mechanization efforts where data formats and programs are under continuing development. This is because a basic program, such as the one described in this section, can be made to perform sophisticated filing functions by virtue of the substitute filing forms entered at input. If the filer who edits the input copy furthermore understands the mechanics of the sort key program, he will be able to determine the filing characteristics of any entry and will also be able to modify it by appropriate substitution

of an entry filing form. This is akin to "programming the data" to get a desired result from a fixed program.

One simple way to indicate a filing substitution on the input format is to designate one typing symbol as a "start substitute," "stop substitute" control symbol. (If this symbol ever occurs in entries, it would have to be coded rather than representing itself.) Then, in a format location associated with the entry and reserved for filing forms, the substitute filing form would be entered. Designating the slash, for example, as the "substitute" symbol, the title entry:

Col. Clayton's lake tour

would appear in two part form, as:

/Col./ Clayton's lake tour | Colonel

Entire entries would be treated in the same manner, where necessary, and an absence of data in the substitution column would be treated as a deletion signal, as in ignored designations of royal privilege:

/K.K./ Geographische Gesellschaft in Wien |

In other cases, this convention would be used to preserve in filing a data element otherwise ignored, such as an abstract noun having the appearance of an article, in:

/A/ to Z of pigeons | A

In this use, the filing form overrides the generally accurate deletion of "a," "an," and "the" in initial positions in English. A more accurate "initial article in nominative case" detector program could doubtless be written, but like many fine distinctions of use in filing, its utility-to-cost ratio would be low.

Language of Publication. A language of publication code would be somewhat useful for the handling of initial articles but would appear even more useful for non-filing applications, such as selective listing. It is thus recommended as an additional input item.

Computer Program

Sort Keys to Be Generated. We wish to generate a sort key that will be compatible with existing computer sort routines. The most common of these routines use a collating sequence of 64 6-bit binary codes that may be variously assigned to separate alpha-numeric symbols. The *IBM Scientific Sequence*[4] is one that is commonly used and will serve our purpose. We will use 37 symbols from it that are sorted in the following order:

1. The numerals 0-9.
2. The symbol b that will represent a word delimiter in our conversion.
3. The single case letters A-Z that will represent themselves regardless of original case.

We will not use the remaining 27 punctuation marks and signs in the sequence, as most are scattered inconveniently throughout the alphabet.

Introduction of Numeric "Pseudo Words" in Sort Key. The sort key is generated by introducing, via computer, numeric "pseudo words"

into the entry text that will cause the key to have the proper file hierarchy. We shall show in the following sections how, for example, the added entry:

Orange, *Mass.* *School Committee*

gets transformed into the sort key:

ORANGEb$_2$b$_7$bMASSACHUSETTSb$_3$bSCHOOLbCOMMITTEE$_2$b

The sort key, of course, is used only to determine file position and will not be printed out for most applications. It could, however, be used as typeout accompanying machine produced catalog cards, that would enable clerical personnel to perform accurate infiling, or at minimum, enable infiling using very simple rules. For this purpose it could be made slightly more readable by two case printout using spaces:

Orange 2 7 Massachusetts 3 School Committee 2

When compared with the sort keys of similar entries, a simple letter-by-letter, word-by-word, numbers-before-letters ordering would determine the entry's position in a file of any size. For purposes of heading printout or typesetting of catalog cards, the entry would appear in its usual typographic form with punctuated double case Roman and Italic fonts, and no excess numeric data.

Program Flow Chart. The program flow chart for the basic rules is shown as Figure 1. It represents the conditional sequences of tests and operations that the program would perform. Non-programmers should be able to follow it readily by considering the geometric coding of elements and a few conventions, as follows:

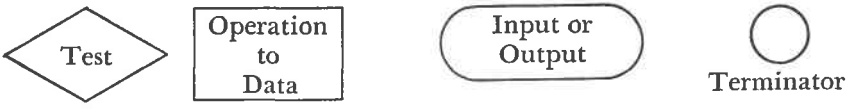

$a \Rightarrow b$ means a replaces b
$a \Rightarrow (b)$ means a replaces the data with name b
e means error

The program starts by initializing the address of the key list, K. As successive words and numbers are stored, the address at which to store the succeeding element replaces the previous K.

We will follow the procedures in generating a sort key from the added entry: Orange, *Mass.* *School Committee.*

The word "Orange" is found not to be an initial article, so the word and a word marker b are stored as the first elements in K. They appear as

ORANGEb

The address K+n replaces the address K, where n is the number of symbols just stored. The next entry will be placed at address K+n.

"Orange" is followed by a delimiter division and is not a title, but is a place entry; so a "2b" is the next entry in the key list, and the address K is increased by two symbol spaces.

In successive tests, "Orange" is not the end of an entry and it is a place, and the delimiter is a comma; so a 7 and word marker b are placed in the list. The next word, which has been expanded from Mass. to Massachusetts by input annotation or memory look-up, is then added to the list, and its delimiter division of period space space adds a 3 to the list. "School Committee" has no internal delimiters, so these two words are added (with word markers). The entry end is itself a delimiter, and the fact that it is an added entry adds a 2b as the last component. The result is as shown previously.

Example of Sort Key Generation: "Philadelphia" Entries. We apply the same process to the "Philadelphia" entries listed on p. 4 of *LC Filing Rules* and obtain the sort key listing of Figure 2. We use a word space, instead of the b space symbol, to increase legibility. It will be noted that abbreviations and numerics in the entries have been expanded to filing form, by table look up or input annotation, as required by the particular program. It is seen by the flow chart and listings that periodicals and titles are treated as separate categories, rather than title entries of various kinds. This merely conserves the use of inserted filing numbers in the basic program. As we expand the capability of the program system in later sections, multiple digit numbering will become necessary.

ABBREVIATIONS

In the keying procedure we have described, we have seen that the manual entry of the full form of an abbreviation, in a "substitution note," provides the sort key program with proper ordering information. Although this is workable, it defeats half the purpose of abbreviations, in that it requires full keying. The other half-purpose of abbreviations, conservation of printing on output, is maintained, however.

Alternatives to "Substitution Notes"

There are two ways to improve the matter. One way is to establish a brief list of the most common abbreviations in computer storage, and the non-existence of a substitution note for a detected abbreviation would indicate that a "known" abbreviation is being used. A second possibility of lesser merit would be to allow non-initial abbreviations of selected kinds to be ordered as is. Candidates for this class might include common place names, subject and form subdivisions, and personal titles. As this method has the unpardonable property of separating like entries, albeit in a predictable manner, an authority list would have to be selected with care. Keying time would be reduced if a special period symbol, an "abbreviation period," were allocated for identification of abbreviations. In this case, abbreviations not expanded in the substitution field would be assumed to be in storage. Acronyms would be handled similarly, as we discuss in the section on INITIALS. The language of publication should be identified to avoid ambiguity of expanded form. Presently unterminated abbreviations (e.g. Xmas) would require termination. Abbreviations to be ignored in filing, such as those repre-

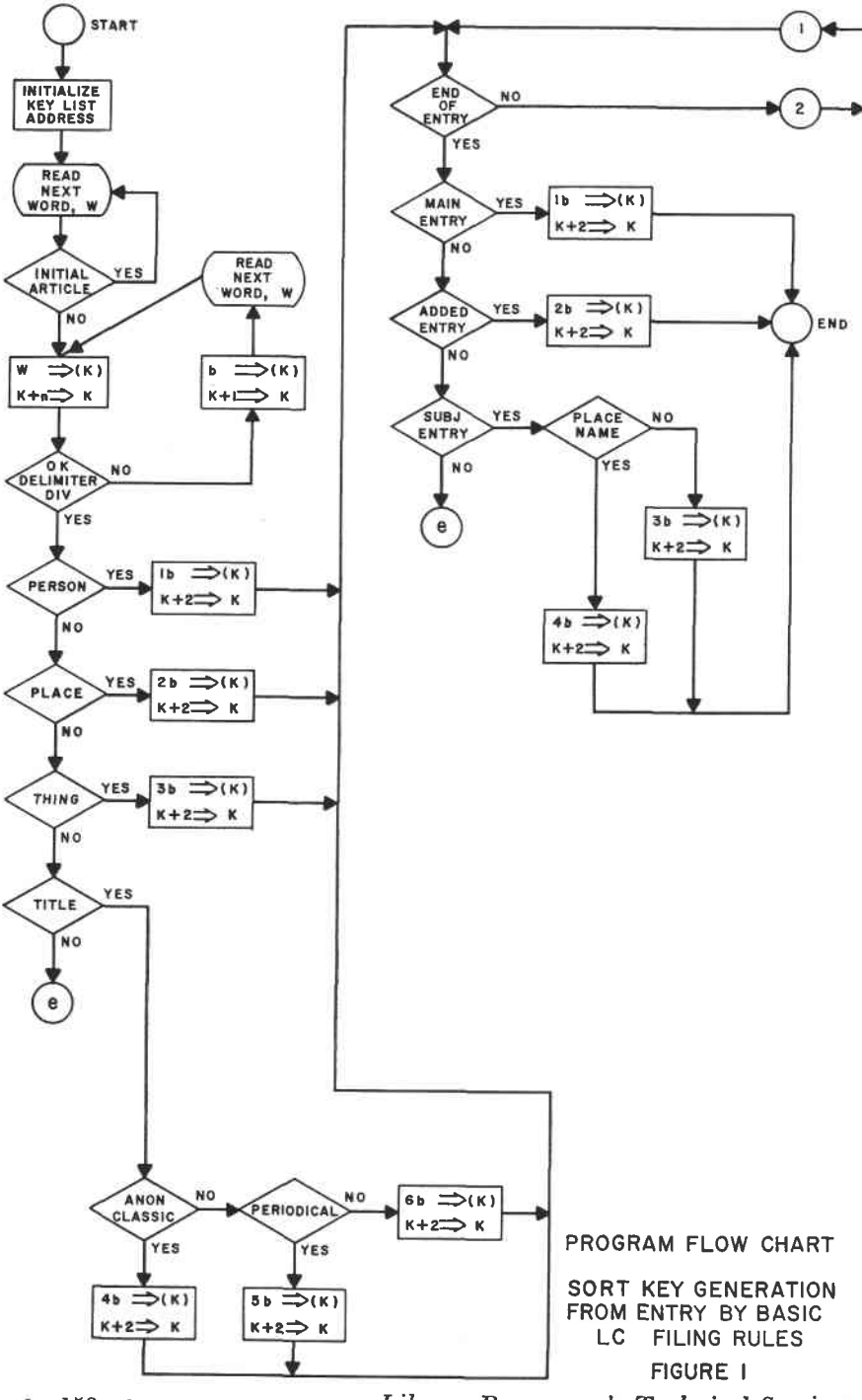

PROGRAM FLOW CHART

SORT KEY GENERATION FROM ENTRY BY BASIC LC FILING RULES

FIGURE 1

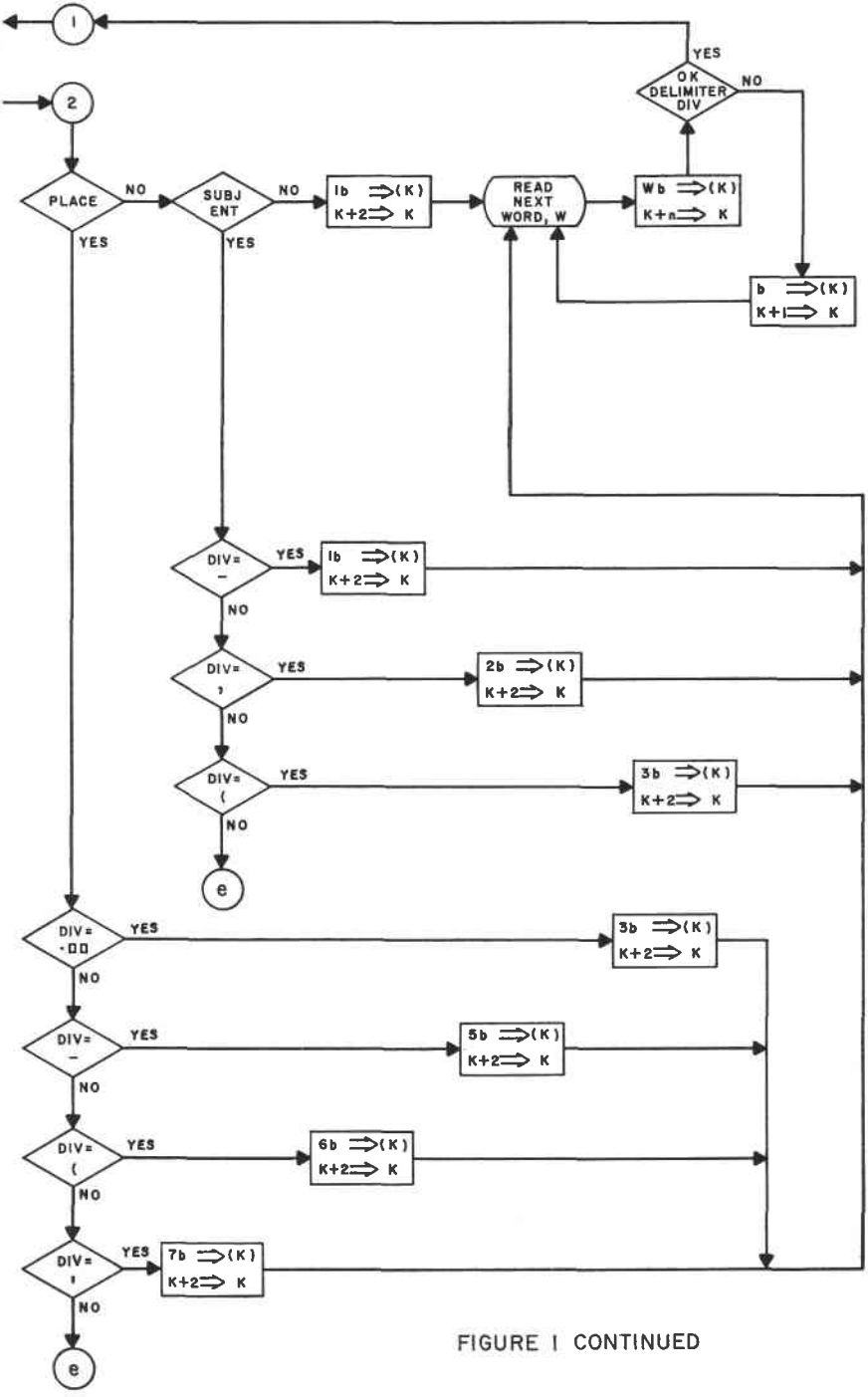

FIGURE I CONTINUED

PHILADELPHIA 1 1 JACOB 2 PSEUDONYM 1		(main)
PHILADELPHIA 1 1 JACOB 2 PSEUDONYM 2		(added)
PHILADELPHIA 1 1 JACOB 2 PSEUDONYM 3		(subject)
PHILADELPHIA 2 1		(main)
PHILADELPHIA 2 2		(added)
PHILADELPHIA 2 3 BOARD OF HEALTH 1		(main)
PHILADELPHIA 2 3 BOARD OF HEALTH 2		(added)
PHILADELPHIA 2 3 BOARD OF HEALTH 4		(subject)
PHILADELPHIA 2 3 CENTENNIAL EXHIBITION 3 EIGHTEEN SEVENTY SIX 1		(main)
PHILADELPHIA 2 3 CENTENNIAL EXHIBITION 3 EIGHTEEN SEVENTY SIX 2		(added)
PHILADELPHIA 2 3 CENTENNIAL EXHIBITION 3 EIGHTEEN SEVENTY SIX 4		(subject)
PHILADELPHIA 2 3 TEMPLE UNIVERSITY 3 1		(main)
PHILADELPHIA 2 3 TEMPLE UNIVERSITY 3 2		(added)
PHILADELPHIA 2 3 TEMPLE UNIVERSITY 3 4		(subject)
PHILADELPHIA 2 3 TEMPLE UNIVERSITY 3 SCHOOL OF COMMERCE 1		(main)
PHILADELPHIA 2 3 TEMPLE UNIVERSITY 3 SCHOOL OF COMMERCE 2		(added)
PHILADELPHIA 2 3 TEMPLE UNIVERSITY 3 SCHOOL OF COMMERCE 4		(subject)
PHILADELPHIA 2 4		(subject)
PHILADELPHIA 2 5 DESCRIPTION 4		(subject)
PHILADELPHIA 2 5 ECONOMIC CONDITIONS 4		(subject)
PHILADELPHIA 2 5 STREETS 4		(subject)
PHILADELPHIA 2 6 ARCHDIOCESE 1		(main)
PHILADELPHIA 2 6 ARCHDIOCESE 2		(added)
PHILADELPHIA 2 6 ARCHDIOCESE 4		(subject)
PHILADELPHIA 2 7 EGYPT 1		(main)
PHILADELPHIA 2 7 EGYPT 2		(added)
PHILADELPHIA 2 7 EGYPT 4		(subject)
PHILADELPHIA 3 3 CRUISER 3		(subject)
PHILADELPHIA 3 3 FRIGATE 3		(subject)
PHILADELPHIA 5 1	(name of periodical)	(main)
PHILADELPHIA 5 2	(name of periodical)	(added)
PHILADELPHIA 5 3	(name of periodical)	(subject)
PHILADELPHIA 6 1	(book title)	(main)
PHILADELPHIA 6 2	(book title)	(added)
PHILADELPHIA 6 3	(book title)	(subject)
PHILADELPHIA AND ITS ENVIRONS 4 1		(main)
PHILADELPHIA AND ITS ENVIRONS 4 2		(added)
PHILADELPHIA AND ITS ENVIRONS 4 3		(subject)

Figure 2
Sort Keys Derived by Basic Program for Entries of Similar Form

senting royal privilege in the names of foreign societies and academies, are treated as any other ignored component, via a null entry in the substitution note.

In summary, the following system is suggested:

1. A substitution note will be used to expand all abbreviations not stored in memory.

2. If common abbreviations are stored in memory, the abbreviated form must clearly be identified as an abbreviation during input.
3. Abbreviations without terminating periods should be disallowed in input but are permissible if computer look-up is not required.
4. A special input symbol, an "abbreviating period" is suggested for those cases where the volume of abbreviation look-up by computer can justify the extra keyboard symbol.

ANONYMOUS CLASSICS

In expanding the basic program to encompass anonymous classics, we would progress through several levels of increased annotation and program complexity. Three information items are needed at input for basic treatment:

1. Identification of title entry as anonymous classic.
2. Identification of title entry as periodical or newspaper.
3. Insertion of delimiters indicating subdivisions of file order.

Item 3 is required because the title program normally ignores punctuation of any kind; in those title cases where file order cannot be based on type identification and symbol strings alone, the input record must indicate those points of subdivisions that vary order, such as the subtitle break in periodicals. Hence the input keying must contain an overriding subdivision code.

With the above information, the following ordering could be obtained:

1. Anonymous classic.
2. Anonymous classic with parenthetical designator.
3. Periodical or newspaper, disregarding subtitles.
4. Other titles with same words.

The input keyer must now begin to make many of the less obvious distinctions that would normally be made by a filer, such as correctly distinguishing those personal name entries that are to be classed as anonymous classic titles, and those apparent anonymous classics that are to be classed as personal entries:

Guillaume d'Orange (French prose romance)	(anon. classic title entry)
Francesco d'Assisi, Saint. Legend	(person entry)

Categories to be Identified

LC Filing Rules, p. 13, lists two additional subarrangement procedures for varieties of the same classic, consisting of 9 elements concerning language and form and two rules concerning language, form, and entry type. Though these could be simply identified by number, this would depart from the principle of identification of primary form and would constitute the identification of relative file position based on combinations of

form. It is possible that this would minimize input annotation. The advantage of identifying form, however, is that the input keyer need only be concerned with the overt aspects of the entry and need not remember the complex rules of ordering. Hence it is suggested that the following 10 categories be identified in the case of anonymous classics:

(a) Manuscripts
(b) Printed texts
(c) Selections
(d) Subject entries for complete works
(e) Parts
(f) Original language
(g) Polyglot
(h) One translation
(i) Successive translations by language
(j) Date of imprint

It will be noticed that we have omitted consideration of whether the translation languages are given in filing titles or headings. There are only two cases where this information is used, and both are unneeded. The first case, the omission of the language, is an indication of original language and hence redundant; the second case, the entry of dual languages in headings, is an obsolete practice.

Logic of the Sort Program

The first 8 orderings (*LC Filing Rules,* p. 13-III) become as follows. We use a logical shorthand to describe the rules, where the center dot (·) means *and,* the center vee (v) means *or,* and the letters represent the categories above.

1. = a
2. = b · f
3. = c · f
4. = b · g
5. = b · f · h
6. = c · f · h
7. = i
8. = d

Describing the rules thus, it becomes apparent that a logical incompleteness exists, in that there is no advice as to the ordering of the case (c·g). Since it is similar, but not identical to case (i), rule 7 should probably be (i)^{v}(c·g).

The remainder of the anonymous classics rules can be implemented with the above information items.

AUTHOR ARRANGEMENT

Under the preferred "Alternate Rules" of LC, personal or corporate

authors are arranged in two groups: works by the author and works about the author. In the first case, main and added entries are interfiled and subarranged by titles. In the second case, an exception is made for subject entries for individual works, which are to be placed immediately after the entries for that work.

Additions to Basic Program

The program addition to handle this would consist of a new test for author entry after "end of entry" had been determined. The "by or about" decision could be accomplished by matching the entry with the author field; and if it were "by," the title would be added to the sort key after an appropriate inserted "file key number." In cases where "about" was true, then a test for subject would be made: if the entry were not a subject, a differing key number would terminate the author's name to insure its position after that of like entries in the first group. If it were a subject in the second group, then the title would be shifted into the initial position of the sort key.

Although these rules can be programmed readily, we have entered the point at which the entry headings and their filing classes are no longer sufficient to determine file positioning. Much longer sort keys and much longer sort times will be involved, when secondary aspects of the entry must be used. From the mechanization point of view, a system that would depend entirely on the entry heading and class identification would be preferred.

BIBLE

There are eleven major bible categories, one of which would have to be identified from input information. Programmed scanning of the entry could also be used to determine the categories if the frequency of use warranted the additional programming and storage. Normally the input typist would supply explicit information.

These categories are:

1. Bible manuscripts
2. Complete Bible—by language
3. Complete Bible—by subject
4. Complete New Testament—by language
5. Complete New Testament—by subject
6. Individual New Testament books—by language
7. Individual New Testament books—by subject
8. Complete Old Testament—by language
9. Complete Old Testament—by subject
10. Individual Old Testament books—by language
11. Individual Old Testament books—by subject

The input for manual signalling of classification could be a few simple check boxes, for example:

Bible Ms. ☐		
Complete Bible ☐		
N. T. ☐	complete ☐	language ☐
O. T. ☐	incomplete ☐	subject ☐

The precedence of Polyglot is a nuisance in the otherwise alphabetical sorting of language entries but could be handled by a special routine operating on language components or by a substitution note of the form AAPOLYGLOT.

Similar Texts

In the case of texts that are similar, the prescribed arrangement is:

(a) by date of imprint—if the same then
(b) by version or translator—if the same then
(c) by place of publication—if the same then
(d) by publisher—if the same then
(e) by title

Rules of this form will be encountered for many kinds of entries, and it is apparent that their principal use is that of "tie breaker" in large scale filing of catalog cards. Their use in automated procedures should probably be made analogous; that is, these rules and like ones should not be made to extend the general sort key of the entry, as this would cause it to grow out of bounds for normal purposes. Rather, rules of this type should be integrated into a generalized "tie breaker" sequence that would apply to all entries. The rule would be applied after a sort on the usual key had determined that its use was necessary.

CORPORATE AUTHORS

For mechanization purposes, it appears highly desirable to unify the treatment of corporate authors and religious denominations. The "Alternate Rules" largely do this, but it appears that both could be handled by the corporate rules alone.

1. Institution as corporate author, without subheading
2. Institution as added entry, without subheading
3. Institution as general subject
4. Institution as general subject with subject subheadings
5. Institution as corporate author with subheadings; each heading followed by its own added entries and subject entries

The distinction between official and non-official subheadings is difficult for human or machine and is left out of the filing criteria on this basis and that of marginal utility.

ELISIONS

Apostrophes will be disregarded in English entries and made equiva-

lent to a word space in non-English entries, unless inhibited at input by a substitution note.

FIRM NAMES

It does not seem that any greatly useful distinctions are achieved by special treatment of firm names. It is suggested that they be subject to the basic rules. Originally there was probably some point to gathering firm names and their founders' names together, but present corporate naming practices have shown this to be obsolete. Also, the division of firms between "persons" and "titles" appears confusing. They should probably be identified uniformly at input as "things" or, following legal notions of the corporation, as "persons."

FORENAMES

Again, the use of LC's "Alternate Rules" prevents a programming nightmare of detecting and distinguishing the ranks and alpha-numeric epithets of popes and sovereigns.

At input, the further identification of the "person" entry as a forename could trigger a routine to establish precedence over surnames and disregard punctuation. A roman numeral detector would also need to be included. The roman numerals would be included in the sort key, but at its terminal position. The section on SURNAMES treats the handling of names in further detail.

HYPHENATED AND COMPOUND WORDS

The input typist must use a substitution note if a hyphen is to be added or deleted in the filing form. The program will treat hyphenated entries as two words and will, of course, distinguish hyphens and dashes. However, the superb intuitions of a human, that can identify

Ab-sa-ra-ka, home of the Crows

as an American Indian name requiring retention of hyphens, would be difficult to simulate by program. If an additional symbol were available on the input keyboard, the use of two classes of hyphens, permanent and non-permanent, would be recommended. Non-permanent hyphens would be used for word division at end of lines and for keying entry terms like "hand-book." Permanent hyphens would be used for entry terms like "Ab-sa-ra-ka."

INITIAL ARTICLE, HUMOROUS SPELLING, ETC.

Filing substitution notes will be used by the typist to indicate variance from the keyed entry. Pathological orthography will require the advice of the head filer.

INITIALS

It is suggested that no special treatment be given initials, and they be operated on by the basic rules and those elaborating entry type. With

minor input substitution, the results will be very close to those of *LC Filing Rules*. In general, initials will have to be delimited and identified as initials so as not to be confused with abbreviations or initial articles.

If we treat initials as words, and disregard punctuation except where subdivision is indicated, the correct identification of the items as people, titles, etc. will create a sort key consistent with non-initialled entries.

Acronyms present a problem in that their substitution notes can become inordinately long. If the more common ones were treated as abbreviations, and terminated during input by an "abbreviating period," e.g. UNESCO., their proper filing form could be simply substituted.

MODIFIED LETTERS

The most frequently occurring modified letters could be detected by the program and appropriate filing substitutions made. The less frequent cases would be handled at input by substitution notes.

NAMES COMPOUNDED OF TWO WORDS

This topic is treated in the section on FORENAMES.

NAMES OF FAMILY, CLAN, DYNASTY, HOUSE, ETC.

The "Alternate Rules" will be followed and will require a delimiting and identification of that portion of the name that is the "family" tag ("family," "clan," "dukes of," etc.). This will modify the sort key at subdivision, so that the family tagged entries of single surname will follow the single surname entries and precede the compound surname entries.

NAMES SPELLED DIFFERENTLY

This topic is not a concern of mechanization, but requires advice on "see" and "see also" references.

NAMES WITH A PREFIX

The previous rules for elisions would have to be amended so that foreign names with apostrophes would not be split. An input "link" note would be used to join separated prefixes to their associated names. The Mc and M' transformation to Mac could be done by program or input annotation. In the former case, an input exception would have to be signalled for African names where the apostrophe is retained. This points out the necessity for the input keyer to know both the rules of filing and the operations that the program will perform to various data elements.

NOBLEMAN'S TITLE AND BISHOPS SEE

Items such as:

Essex, Arthur Capel, 1st earl of
and
Ely, Bishop of, 1506-1515

could be identified at input as "person" rather than "place," resulting in the major portion of the LC rule being accomplished. Treated thus, a further identification of "Title or See" would be programmed to have precedence over forenames, completing the desired arrangement.

NUMBERS

If one set out to deliberately destroy the simple precision of numerical hierarchy, little worse could be done than to insist that numbers be ordered by the spelled out equivalents of their spoken sound. In this writer's view, the present filing rule should be quickly replaced by one in which all cardinal or ordinal numbers, whether in alphabetic or numeric form, would be ordered by their elementary numeric value.

As this is unlikely to occur with any haste, it will probably be necessary to write programs to convert the numeric portions of entries to alphabetic form. This can be done by identifying the number as one of three forms: a number serving as a label, as in a date or address, to be taken in successive two digit groups, e.g. "eighteen ten" (odd digit labels would start with a single digit); or a quantifier, e.g. "one thousand eight hundred ten"; or a sequence of single digits, e.g. "one eight one [zero? oh? naught?]." Within the small collection of samples in *LC Filing Rules* (p. 91), four digit quantifiers are converted to differing forms by application of some unspecified and doubtless unprogrammable subtlety. Reduction to the three forms suggested would help some, as would a purging of all "ands" not indicating decimal fractions.

The LC alternate rule for titles, such as "Report" preceded by a number, wherein the titles are arranged alphabetically by the word following the number, and subarranged numerically, constitutes a step towards order. Many more steps are needed. A system that results in the number one being filed between nine and seven if it is cardinal, and between five and four if it is ordinal, is in certain need of drastic revision.

NUMERICAL AND CHRONOLOGICAL ARRANGEMENT

The rules for numerical and chronological arrangement are a generally satisfactory collection that order numeric data numerically. The exceptions are those of the previous section. For automation purposes, it would be preferable to take all subdivisions in the order they occur and arrange numerical constituents numerically. This would affect the filing of legislative documents somewhat, but only by permuting the present order of considering subdivisions. It would greatly facilitate automatic handling if the data were arranged on the entry in the same order it was to be used in filing. In all subject areas, compromises should be made that would adjust entry sequences and/or filing rules to conform to a sequential filing order. This would save much input record annotation and much special programming that would otherwise be required to identify and rearrange particular cases.

ORDER OF ENTRIES

This topic has been treated in earlier sections. With minor exceptions suggested in other sections, these rules can be implemented by program without especial difficulty. Where changes have been suggested, these have mainly been to reduce the amount of input annotation required, which is the limiting factor. It is obvious that a computer can be programmed to perform any rule in the book, however complex, providing that the decision criteria are explicitly available on the input record or can be derived from it. The goal of rule simplicity is that of reducing the manual elaboration required by minimizing special cases and exceptions wherever possible.

ORIENTAL NAMES

The recognition of oriental names will be the task of the input keyer, who should provide substitution notes where special filing forms are required. Accents and aspirates will normally be ignored, and hyphenated parts of names will normally be treated as separate words. The principal annotation required will be to indicate deletion of certain Arabic-type articles preceding names. In this case, it is probable that an input note identifying the name as a near-eastern one, requiring treatment according to a stored program and stored list of articles, would be no less bothersome than changing the filing form through a substitution note. This illustrates another limiting case of programmed transformation where identifying the item for automatic operation requires as much information as explicitly specifying the operation.

PLACE ARRANGEMENT

The objectives of the Place Arrangement rules are largely met by the basic rules specified earlier. The treatment of phrase subject headings, and institutions with non-separated place name, as titles will depend on their identification as titles at input.

The question of sequential vs. non-sequential treatment of elements in an entry arises again in the case of changes of government and changes of administrative units. It is suggested that a strict sequence be used in all cases, in which case the date at the end of such entries would be the detailed tie breaker.

Place names beginning with an article or prefix, excepting English articles or prefixes, would be linked by an input note so that they would file as one word.

The ordering of entries with exceptional arrangements, e.g. "New York" entries, should be brought in line with the usual conventions, either by straight application of the general "place" rules, or by revising the format of entry keying. The same applies to the occasional inversions (e.g. university, state) that are filed in reverse form. The input keyer could, of course, make an input note signalling such exceptions; but the number of these exception signals could easily grow out of control and are best reserved for more necessary exceptions.

PUNCTUATION MARKS, POSSESSIVE CASE

These rules are essentially covered by the basic rules. Punctuation marks, possessive case, plurals, etc. will be disregarded in title filing. Periodicals, including newspapers, will be filed by the main part of their titles and will precede other titles of the same name as the main part.

REFERENCES, AUTHORITY CARDS, FORM CARDS

If these were to be included in the machine file, their ordering would probably be arranged by input annotation. The alternative would require identification routines that would always operate, and seldom identify, due to the low relative frequency of these entries.

SIGNS AND SYMBOLS

Consistent with the treatment of punctuation and abbreviation, it appears desirable to consider all signs as null entries and treat the residual as full entry under whatever other classification it may come. The ampersand would be treated as a conjunction in the language of the entry.

SUBJECT ARRANGEMENT

The basic rules of subject arrangement (*LC Filing Rules,* Section I and II, p. 140) are met by the basic program conventions outlined earlier. It will be noted we have used the preferred alternate rules for ordering inverted subject headings before those followed by parenthetical terms. The additional refinements necessary are discussed here. Under the conventions of *LC Filing Rules,* Section III, p. 141, additional identification of subject items separated by dashes is needed as follows:

(1) Form or subject subdivisions
(2) Period subdivisions
(3) Geographic subdivisions

The remainder of Section III is covered by the basic rules.

Under *LC Filing Rules,* Section IV, p. 141, subjects without subdivision, the ordering programs would have to have an added section that would break ties in such entries via a sub-ordering of main entries. The period subdivisions, including language and literature subjects, would require means for converting period names to period dates. A substitution note would suffice initially.

SURNAMES

Several components of a surname entry must be individually identified if a filing program is to operate upon it. These components are:

a. Surname, including compound surname component if present.
b. "Family" or "Clan" component.
c. Titles preceding forenames to be disregarded in filing (e.g. "Mrs.," "Sister").

d. Forenames or initials thereof.
e. Dates, including alphanumeric portions.
f. Appellatives or titles used in filing (e.g. "clockmaker").

If we insist on an item-by-item keying sequence that invariably goes "1, 2 if present, 3 if present, 4 if present, 5 if present, 6 if present," the program will be simplified.

The formal ordering properties of the above elements are listed following, using the symbolism A for item A present, $\bar{A}$ for item A absent, and no mention if the item is not a necessary logical component. Each of the seven entry types is taken in succession, and within each group, the ordering sequence of items is as shown.

Entry Type	*Item Existence*	*Ordering Sequence for Entry Group*
1	A $\bar{B}$ $\bar{D}$ $\bar{E}$ $\bar{F}$	A
2	A $\bar{B}$ $\bar{D}$ $\bar{E}$ F	A, F
3	A $\bar{B}$ $\bar{D}$ E	A, E, F
4	A $\bar{B}$ D $\bar{E}$ $\bar{F}$	A, D
5	A $\bar{B}$ D $\bar{E}$ F	A, D, F
6	A $\bar{B}$ D E	A, D, E, F
7	A B	A, B, D, E, F

The ordering would first proceed through the seven groups above for "A" a single surname, and then proceed through seven identical groups where "A" would be a compound surname of the same initial component. The compounding hyphen of the compound surname would be converted into a precedence number in the sort key that would assure its appearance prior to longer single surnames of the same beginning. The alternate rules are observed with respect to family entries following identical family names, rather than after compound surname entries of the same initial part. Also following the alternate rules, "pseud." is regarded as an ordinary appellation of no special precedence.

It is likely that a consistent name handling program, that would include the forename cases, could be designed on a basis similar to that above. The division of item identification, between input signalling and programmed detection, would be based on further analysis of occurrences.

TITLE ARRANGEMENT

Title arrangements have been considered in the basic rules and in the sections on ANONYMOUS CLASSICS and BIBLE. The main program addition to the basic rules required to treat the general case is to consider the main entry of a title added entry as a tie-breaking extension in the sort key or ordering program.

Periodicals will require additional identification of component parts: place of publication, date of publication, and subtitle; as well as an appropriate program routine to order them. No special problems appear present.

Musical titles will require special annotation at input and special subroutines to order their subdivisions and other singularities. They do not appear amenable to general title adaptation.

WORDS SPELLED IN TWO WAYS

This section does not affect the program. It states a preference for the spelling of the title page and suggests references prior to titles.

CONCLUSIONS AND RECOMMENDATIONS

It appears quite feasible to develop a program for a majority of the rules listed in the *LC Filing Rules*. The program would neither be a short one nor a simple one; but neither is the rule book it would be based on, nor is the body of bibliographic data it would operate on.

Approach

The method for automatic filing, which appears feasible, requires two developments.

1. The development of algorithms for arranging the entries based on a processing of their identified parts.
2. The development of methods of annotating entries as presently printed on cards to (a) identify the constituent items contained in entries, and (b) to specify variance in their filing forms and sequences when such variance is not part of the normal sort program. These annotation methods consist of:
   - a. *Identification*
     The identification of the filing class or category of an item; for example, identification of an entry as person, place, thing or title.
   - b(1) *Substitution*
     The substitution of a filing form of an item; for example, Doktor would be the filing form for Dr. in a German entry.
   - b(2) *Deletion*
     The indication of those portions of an entry to be ignored in filing; such as the omission of authors' names in possessive case and initial position preceding titles, as in Shakespeare's "As You Like It."

Orderliness vs. Simplicity

Some recent recommendations to strip away the refinements of bibliographic filing as a concession to mechanization appear ill advised, and there is evident confusion between *simplifying the rules* and *making them orderly*. Mechanization requires only an explicit orderliness. Hence, the major emphasis in LC rule revision should be towards algorithmic orderliness. If unification or simplification can also be achieved without loss of function, then this is greatly to be favored. Input keying methods needed for annotation, however, require simplicity as well as order.

Recommendation for Test Program

The next step in developing a mechanized version of the *LC Filing Rules* is to begin actual programming following the plans outlined here. The program should be written with the intent of preserving the majority of present LC conventions, and it should be assumed its function will be to order densely clustered entries in the Library of Congress. Simplifications can always be made for institutions not requiring the fine resolution of classical filing systems. One operating program of considerable complexity, along with documented computer running time and storage, is worth volumes of debate in determining what rules the next edition of the *LC Filing Rules* should contain.

REFERENCES

1. Library of Congress, Processing Department. *Filing Rules for the Dictionary Catalogs of the Library of Congress.* Washington, D.C., U.S. Government Printing Office, 1956.
2. *Ibid.,* "Appendix (Alternate Rules)," pp. 166-79.
3. Buckland, Lawrence F. *The Recording of Library of Congress Bibliographic Data in Machine Form.* Washington, D.C., Council on Library Resources, Inc., 1965.
4. Avram, H. D.; Freitag, R. S.; and Guiles, K. D. *A Proposed Format for a Standardized Machine-Readable Catalog Record.* (ISS Planning Memo No. 3) Washington, D.C., Library of Congress, June 1965.
5. Library of Congress, Information Systems Office. *MARC Pilot Project Report,* nos. 1, 2, 3. Washington, D.C., Library of Congress, April 1966.

MEMORIAL FUND FOR ESTHER J. PIERCY

A proposal to provide a suitable memorial to Esther J. Piercy, Chief of Processing at the Enoch Pratt Free Library, Baltimore, whose sudden and untimely death occurred on January 10, 1967, was adopted by the Board of Directors of the Resources and Technical Services Division of the American Library Association on January 12.

Miss Piercy had served as Editor of the *Journal of Cataloging and Classification* from 1950 until, in 1957, it was succeeded by *Library Resources & Technical Services* which she edited until her death. For her distinguished service as Editor of these two journals, she was awarded in 1958 the Margaret Mann Citation, given each year for outstanding achievement in the areas of cataloging and classification. As Editor, she served as a member of the Board of Directors of the ALA Division of Cataloging and Classification (1950-56) and then of the Resources and Technical Services Division (1957-67). She was a member of the ALA Council from 1948-52 and from 1959 to 1966, and of the ALA Executive Board from 1962-66.

Miss Piercy's publications included chapters on the "Organization and Control of Materials" in *Public Library Service* (American Library Association, 1956) and in *Local Public Library Administration* (International City Managers' Association, 1964). She was author of *Commonsense Cataloging,* a manual for the organization of books and other materials in school and small public libraries (H. W. Wilson, 1965).

Communications or contributions to a memorial fund for Miss Piercy may be directed to the ALA Resources and Technical Services Division, 50 East Huron Street, Chicago, Illinois 60611.

Revision of the Current Library of Congress Catalog Card Format*

HENRY VOOS, *Chief*
Technical Processes Section, Technical Information Branch
Picatinny Arsenal, Dover, New Jersey

The breakthrough is possible through really fundamental rethinking and, if necessary, through sacrifice of the most-cherished preconceptions and predilections for one system or another.[1]

LIBRARIANS, DOCUMENTALISTS, information scientists, and other scientific and engineering personnel look for ways to increase the speed of processing library materials so that they can make these materials available to the scientific community quickly.

One of the causes of backlogs in disseminating technical information, for those systems using catalog cards, is the time required to prepare the catalog cards for the files. These cards are often used both as a holdings record and a reference tool. One solution which reduces processing time is centralized cataloging—provided everyone accepts the cataloging as it is done. Currently the largest source of centralized cataloging information is the Library of Congress.

However, when the current LC catalog card format is used (Exhibit 1), each library must in some manner place the call number and individual subject and added entries on each unit card in a card set. This is usually accomplished by typing the call number in the upper left-hand corner and the tracing above the main entry on the unit card. Typing of these tracings consumes valuable clerical time which could be better utilized in other library operations.

One of the first attempts to solve the problem of speedy processing and dissemination by changing the format of the catalog card was made in 1949 by the Group for Standardization of Information Services (GSIS).[2,3] The GSIS solution was a card divided vertically (Exhibit 2), the area to the left of the vertical line being used for the descriptive information occupying two-thirds of the total area of the card. The remaining third of the card (to the right of the vertical line) was used for the subject headings (descriptors) and added entries.

The vertically-divided card had many advantages. Blocking out the tracings permitted the card to be used as an announcement medium by photographing the descriptive portion of the card full size, two columns to a page.[4] Another advantage of this divided card was that the subject headings need not be retyped on each unit card in a card set, but could

* The data in this paper is based on a doctoral dissertation entitled "Standard Times for Certain Clerical Activities in Technical Processes," accepted by the Faculty of the Graduate School of Library Service, Rutgers University, in January 1965.

be underlined and the cards then sorted and filed.[5] However, these cards also had certain disadvantages. Unless guide cards were used for each subject, it became visually difficult to locate the cards in the file because about 50% of the headings appeared below eye level. In addition, de-

McFadden, Dorothy Loa (Mausolff) 1902–
Touring the gardens of Europe, by Dorothy Loa McFadden. Wheel tour maps by Winfield Barnes. New York, D. McKay [1965]

xii, 306 p. illus., maps. 22 cm.

1. Gardens—Europe. 2. Europe—Descr. & trav.—Guide-books. I. Title.

SB466.E9M3 712.094 65–18547
Library of Congress [5]

Exhibit 1

McFadden, Dorothy Loa (Mausolff) 1902–
Touring the gardens of Europe, by Dorothy Loa McFadden. Wheel tour maps by Winfield Barnes. New York, D. McKay [1965]

xii, 306 p. illus., maps. 22 cm.

SB466.E9M3 712.094 65–18547
Library of Congress [5]

1. Gardens–Europe
2. Europe–Descr. & trav.–Guide-books
I. Title

Exhibit 2

spite the fact that typing individual subject headings on unit cards was eliminated, the number of carriage returns per master card was increased by about one third. These extra carriage returns meant that more items required multiple cards. This type of card, although adopted for technical reports, was not used for cataloging books.

This paper proposes a revision of the current LC catalog card format. The card format being proposed consists of taking the standard one and moving the tracings from the bottom of the card to the top of the card (Exhibit 3). This change makes the headings readily visible. To prepare them for sorting and filing, they can be underlined, or, as Kiersky has done, rubber-stamped with an arrow. The proposed revision of the catalog card first was brought to our attention in 1957. It was subsequently referred to in the literature in articles by Kiersky[6] and by Costello and Voos.[7]

Another version of this technique, which basically does not change the current catalog card format but eliminates the typing of the headings, is called "rubricating."[8] "Rubricating" is accomplished by underlining the call number and drawing a line from it to the tracing on the bottom of the card (Exhibit 4). This solution to the typing problem retains the headings on the bottom, and therefore makes consultation of the catalog difficult unless a guide card is filed before each heading in the file.

It might seem feasible from a processing standpoint to leave the current LC card as it is and file it behind guide cards. Although this would in fact save the typing effort, it would still require some sort of underlining or checking on each unit card to let the filer know the file point. The time to prepare a guide card for each heading would have to be added to the cost of applying this solution to the problem. The guide card preparation would, of course, decrease over a period of time since the number of new subjects might decrease. But in a card catalog, the number of added entries would not appreciably decrease. In addition, either a cataloger or filer would have to determine sometime in the processing cycle whether guide cards for a heading existed or whether they would have to be prepared. The checked entries in the subject authority would help decrease this checking effort to a great extent. It is felt that the proposed catalog card revision can be effectuated with the least time and disruption to current library routines.

Richard Hyman rejected the proposed catalog card in his 1963 article on the unit card.[9] The reasons for the rejection were the following:

First, that the solution would be impractical for the humanities and social sciences since the headings in science and technology were much terser than those in the aforementioned sciences.[10] Table I was compiled to test this objection. The number of headings and number of characters in these headings for the fields of science and technology was taken from Sprenkle and Kilgour's article.[11]

It is true that the headings for science and technology are terser. But it is also true that the average number of subject headings in science and

technology is greater. Therefore, it would still require more space dedication for subject entries in the fields of science and technology. It should also be noted that, although the average number of characters per added entry is significantly greater in the humanities and social sciences, the prime component of the added entry was found to be the

1. Gardens—Europe. 2. Europe—Descr. & trav.—Guide-books.
I. Title.

McFadden, Dorothy Loa (Mausolff) 1902–
Touring the gardens of Europe, by Dorothy Loa McFadden. Wheel tour maps by Winfield Barnes. New York, D. McKay [1965]

xiii, 306 p. illus., maps. 22 cm.

SB466.E9M3 712.094 65–18547

Library of Congress [5]

Exhibit 3

SB466
.E9M3

McFadden, Dorothy Loa (Mausolff) 1902–
Touring the gardens of Europe, by Dorothy Loa McFadden. Wheel tour maps by Winfield Barnes. New York, D. McKay [1965]

xiii, 306 p. illus., maps. 22 cm.

1. Gardens—Europe. 2. Europe—Descr. & trav.—Guide-books.
I. Title.

SB466.E9M3 712.094 65–18547

Library of Congress [5]

Exhibit 4

TABLE 1
Number of Tracings and Characters for the Social Sciences, Humanities, and Science and Technology

Discipline	*Type of Entry*	*No.*	*Characters*	*Total Characters*
Science & Tech.	Subject	1.56	25.8	40.248
	Added Entry	1.33	20.3	26.999
		2.89		67.247
Social Sciences[a]	Subject	1.00	33.7	33.7
	Added Entry	2.25	29.2	65.7
		3.25		99.4
Humanities[a]	Subject	1.25	28.2	35.3
	Added Entry	2.00	26.4	52.8
		3.25		88.1

[a] Taken from July 1965 issue of *The National Union Catalog.*

title. In the proposed format, this is indicated by the word "Title," but it is never typed out. It is arrowed or underlined in its position in the descriptive cataloging. The point of entry indication is still above midpoint and at eye level for card consultation.

Second, Hyman objects to the fact that one cannot indicate whether the tracing is a subject, author, or title. He also states that the user is confused now, and the solution might tend to confuse him more. There is no evidence that there would be more confusion; in fact, perhaps a straight dictionary filing without consideration of whether the heading is an author, or title, or subject might make things easier for the user. It is felt that Hyman's goal of "one card duplicated with change of form,"[12] is achieved with the proposed change of format.

Standard time data is available which permits further evalutaion of the proposed card revision. If we accept the estimate of 12 characters for the average call number (Sprenkle and Kilgour) and 23 characters for the average subject heading (LC study),[13] then it would take about 14 seconds to type this data on each printed card. The above typing time excluded both the .18 seconds required to insert and remove cards from the typewriter[14] and the time required to type the added entries. The standard average time per key stroke used is .40 seconds for typing a character on a catalog card.[15]

If catalog cards are produced locally from masters, the time required to type the cards will be the same whether the current LC format or the proposed LC format is used. However, in using the proposed format, no additional typing beyond the original unit card master is necessary. Thus 9.20 seconds would be saved for each card which would require the typing of a subject heading if the current LC catalog card format is used. This saving in typing time must be reduced by the time required to underline (2.3 seconds) or arrow (2.8 seconds) a heading.

Sprenkle and Kilgour estimated 2.89 tracings per card set. Using the proposed card format could therefore save at least 19 seconds for each title cataloged. The time required to underline or arrow the set has already been deducted from the time saved above.

The proposed card format revision still requires the individual typing or stamping of the call number if the cards are not locally reproduced. It is suggested that a slightly larger typeface for the tracings be used than is current practice, and that a short horizontal line be provided to divide the tracings from the descriptive cataloging.

Considering that over 25 million cards additional to the main entry cards were sold by the Library of Congress in 1963, it is felt that the proposed format is worthy of comprehensive testing by the Library of Congress and other agencies preparing catalog cards. In a library cataloging, 5000 titles per year this would amount to 2 man-weeks per year saved. On a national level the processing time saved would be about 68,000 man-hours.

REFERENCES

1. Metcalfe, John. *Alphabetical Subject Indication of Information.* New Brunswick, N. J., Rutgers University, 1965. (*Rutgers Series on Systems for the Intellectual Organization of Information,* v. 3) p. 126-127.
2. Fry, B. M. *Library Organization and Management of Technical Reports Literature.* Washington, Catholic University, 1953. (*Studies in Library Science,* no. 1)
3. Gray, D. E. "Organizing and Servicing Unpublished Reports." *In* Egan, M. E., ed. *The Communication of Specialized Information.* Chicago, University of Chicago Press, 1954. p. 34-53.
4. Mixson, R. E. "Reproduction of Technical Papers." *In* Fry, B. M. and Kortendick, J. J. *The Production and Use of Technical Reports.* Washington, Catholic University, 1955. p. 41.
5. Croxton, F. E. "Identification of Technical Reports." *In* Fry, B. M. and Kortendick, J. J. *op. cit.* p. 121-137.
6. Kiersky, L. *Special Libraries,* 49: 387. 1958.
7. Costello, M. A. and Voos, H. "Preparation of an Information Bulletin." *Special Libraries,* 50:454. 1959.
8. Farley, Earl. "Rubrication: A Special Library Art Transforms a General University Catalog." *Special Libraries,* 53:330-331. 1962.
9. Hyman, R. J. "Wanted: A True Unit Card!" *Library Resources & Technical Services,* 7:105-112. 1963.
10. *Ibid.* p. 108.
11. Sprenkle, K. M. and Kilgour, F. G. "A Quantitative Study of Characters on Biomedical Catalogue Cards—A Preliminary Investigation." *American Documentation,* 14:202-206. 1963.
12. Mann, Margaret. *Introduction to Cataloging and the Classification of Books.* 2d ed. Chicago, American Library Association, 1943. p. 105.
13. U. S. Library of Congress. *Automation and the Library of Congress.* Ed. by Gilbert King. Washington, 1963. p. 55.
14. Fry (George) Associates, Inc. *Catalog Card Reproduction.* Prelim. data, 1964.
15. Voos, Henry. *Standard Times for Certain Clerical Activities in Technical Processing.* Prelim. data, 1964.

Bridging the Gap Between Cataloging and Information Retrieval*

DORALYN J. HICKEY, *Assistant Professor*
School of Library Science
University of North Carolina, Chapel Hill

THE EXPRESSION "BRIDGING THE GAP" seems particularly apt in discussing the relationship between catalogers and information specialists. And that gap has been widening, almost as if there were a continual earth tremor which first produced a fissure, then a crevasse, and threatens to become a chasm. Catalogers stand on one side, glaring hostilely across at their information counterparts on the slowly-retreating opposite bank. To be sure, the situation may not be quite so dire, but the gap is a real one nonetheless.

Before attempting to build a bridge, it would be wise to determine the nature of the gap itself in order to discover what type of structure will best do the job. That first fissure developed almost imperceptibly after World War II, based upon a number of internal pressures in our society: military-trained students returning to school by the thousands, economic expansion in phenomenal proportions which utilized many of the wartime inventions hitherto restricted to ordnance production, and major population increases among the younger age groups. In many professions and industries, the labor force failed to meet the demands of expansion; thus the automation, employed to minimize wartime labor shortages, was continued and furthered during the 1940's and '50's. Governmental interest in defense kept in force much of the lucrative contract work upon which industry thrived. The people's already well-developed fascination with technology was only augmented when the successful Russian satellite was orbited; their competitive spirit rose to meet the challenge, and "basic scientific research" became an honored pursuit, even when it produced no obviously-utilitarian results.

These various factors—lack of sufficient trained labor, expanding emphases on research and development, technological breakthroughs, and the growth of mass educational needs—combined in a rather amazing way (viewed in retrospect) to construct a major push toward information retrieval at the same time that the technology was able to devise the tools to accomplish it. The scientists, whom the nation honored, produced the information; and the technologists, whom the nation admired, produced the equipment to process it. Recognizedly, the information was generally expressed in numerical terms, not linguistic;

* Paper presented to the Technical Services Section, New Jersey Library Association, May 6, 1966.

however, the retrieval capabilities of the machines were no less spectacular, for all their limitations.

Meanwhile, back in the libraries, the impact of this increasing earth tremor was somewhat muted—perhaps by the massive stone walls of the typical bibliothecal edifice. The libraries had, of course, a set of problems all their own: shortages of trained staff, increased book budgets, burgeoning education programs (both formal and informal), and administrative complications. Their operations were non-profit, and they did not contribute ostensibly to the orbiting of satellites. Libraries were viewed as neither glamorous nor financially remunerative: the two most common measures of success in American society.

In a desperate attempt to keep materials moving onto the bookshelves, librarians economized in several ways. (1) They were slow to invest significantly in the training of new staff members or in the continuing education of their present staff. (2) They trimmed services, both directly by not providing adequate reference assistance, and indirectly by cutting down on the number of cards and the amount of data recorded on the cards in the public catalog. (3) They spent an unconscionable number of hours planning new structures while at the same time avoiding any major expansion of their bibliographical services to patrons, on the excuse that these would have to wait for "more space."

Looking particularly at the cataloging operation, we find that many people who were employed as "librarians" had been trained for their jobs either locally or in library schools with a strong vocational orientation. They were familiar with only one set of procedures and had, typically, worked in only one library during their entire careers. Obviously most of them were not prepared to question old routines or to design new ones that would meet the demands of a post-war society which was already "off and running." The philosophy or rationale for cataloging operations had never been presented to them, and many of the members of large cataloging departments had completely lost touch with library users.

The results of this preoccupation of libraries with their own problems and this lack of flexibility in cataloging are all too familiar. Just at the time when the scientists were beginning to clamor for more numerous and deeper approaches to their literature, the catalogers were busily cutting back at every possible point: less careful establishment of names, fewer bibliographical notes, a smaller number of subject headings (and more complicated ones), less added entries, fewer cross references (they clutter the catalog!). Practically no attempt was made to evaluate the loss of these items to the public; the fact that some of the economies were long overdue while others actually stymied the patron in his search for materials was not considered, except occasionally when the librarian's conscience bothered him and he conducted a "use study," often merely an *ex post facto* self-justification process.

Then, what about the masses of non-book materials: report literature, audio-visual media, microforms, periodicals, pamphlets? The cata-

logers allowed them to sit on the storage shelves—uncataloged, unlisted, unexamined, and often undusted. While the librarian pleaded that he had no time (and often he did not) in which to record such materials, the scientist pleaded that his information was not necessarily found in books. The antithesis between science and religion became nothing as compared with the hostility between science and librarianship. Unfortunately, the librarian's reputation with the social scientist and even the humanist—his traditional ally—was not much better.

The irony appears when we examine closely the librarians, particularly the catalogers, who refused to go along with economy measures and clung to the methods of the past. Being just as uncritical as the economists, they erred in the opposite direction by trying to retain a great deal of useless bibliographic detail while allowing their approach to subject analysis to deteriorate into a kind of wooden application of Sears or Library of Congress subject headings and the Dewey or LC classification numbers. Thus they were not any more respected by their patrons than were their economy-minded colleagues.

The typical librarian met such criticism either defensively or apologetically. Few had been trained in the sciences or had any real understanding of the rigors of scientific research. The scientist's immediacy of need for materials contrasted sharply with the traditional slow, careful pace of the humanist who might study a field for fifty years before publishing anything. But even this brand of humanist was disappearing, replaced by "upstarts" who irreverently suggested that much of the so-called scholarship of the past consisted of an overrated piece of clerical work which a computer could handle in a few hours. To add the proverbial insult to injury, they implied that much of the librarian's scholarship in the cataloging operation was also overrated and essentially clerical in nature.

Since scientists were unable to gain much cooperation from librarians, they began to develop their own information specialists. Sometimes called documentalists, these people were not, as a rule, first-line scientists. Some of them are still considered second-rate in their own fields: students of science who themselves cannot create but who can manipulate the creations of others. A few trained librarians defected to the "enemy" camp, either because of a scientific bent or because they were shrewd enough to see some economic advantages which might accrue to them in the future. In any case, the information specialist appeared, usually attached to a particular research laboratory and dedicated to supplying the particular materials and data which the research scientists required.

Without any stultifying preconceptions about how data should be handled, many of these information specialists speculated excitedly about the use of mechanical equipment to control and retrieve materials. Since most of them were not librarians, they had neither the librarian's caution nor his conservatism. The patrons whom they served were in many ways more predictable than the general range of library users, and

their materials collection was often more circumscribed. No one had made it clear to them that their data could not possibly be manipulated successfully in the depth that they sought; hence, they went about devising methods to do just that, with sufficient achievement to confound the Cassandra-like pronouncements of many librarians.

Given this somewhat oversimplified précis, it is reasonably clear that the information specialist and the librarian would naturally find a gap developing between one another. In addition, the monetary factor should not be overlooked: the information specialist was connected with an operation amply financed by foundation grants or industrial profits, while the librarian was generally underpaid and could expect to remain so. And the information specialist had an air of prestige about him—albeit sometimes unwarranted—which alienated the librarian. Thus the gap did not lessen.

Now, before we start building that bridge, we must ask whether anyone really wants to eliminate the gap. Many librarians do not; and certainly many information specialists are totally uninterested in making a crossing to the catalogers' side. There are, nonetheless, a growing number of librarians and documentalists who realize that they have much to learn from each other. The creation of an "Information Science and Automation Division" within the American Library Association, while questionable in some respects, stands as a monument to the recognized need for librarians to be directly concerned about the implications of data processing and computer operations for the nation's book repositories. Similarly, some librarians have found it to their advantage to belong to the American Documentation Institute, and a few documentalists have even joined ALA. The majority of librarians, however, appear to feel a little guilty about not knowing what "automation" really means; they have a vague sense of uneasiness, but they are not ready to build any bridges on their own.

Many of us, I suspect, are numbered among the latter: the vague, uneasy ones. It is for us that temporary bridges need to be constructed: something on the order of the "rope and vine" variety found in the jungle. Any such bridge would include a collection of "strands," for example, (1) a genuine interest in and enthusiasm for the future of librarianship, whatever direction it may take. In other words, the attitude of the librarian, and particularly the cataloger, must be positive and yet malleable. This is not to say that the librarian must "fall in love" with data processing equipment or become machine-mad. It does suggest that he will be open to possibilities of change and welcome the opportunity to become more professional in his work. He will view the possible mechanization of his tasks as a challenge rather than a danger.

A second strand in the temporary bridge is (2) a program of self-education. Here the cataloger has an especially large order. If you find that you have trouble understanding the articles on machine methods in *Library Resources & Technical Services,* you will be in far greater difficulty should you tackle *American Documentation,* worse yet *Datama-*

tion. Perhaps the trouble lies in your lack of an adequate vocabulary. In reading one article in *Datamation,* I finally discovered that the meaning came clear if I substituted "descriptive cataloging" for the term "data processing," and "subject cataloging" for the term "inverse data processing." The authors would probably have been horrified, but it made sense to me that way, and it was an accurate substitution according to the definitions given early in the article.

Library school students of today are almost obsessed with the idea that they have to know "something about information storage and retrieval." Many view the whole thing as a kind of Spartan self-discipline; they dread the reading and hate machinery. Their first forays into the literature are always traumatic; but if they persist, the confusion and fear almost invariably dissipate. Glossaries of terms are not particularly helpful except for reference. There seems to be no substitute for "jumping in and getting your feet wet."

By way of suggestion, you might begin with an extremely elementary description of the operation of punched cards and computers. An attractive book for young people which is highly simplified but not insulting is Raymond G. Kenyon's *I Can Learn About Calculators and Computers* (Harper, 1961). It even offers instructions for building your own computer. If you are curious about the "cult" of the computer programmer, try Herbert D. Leeds and Gerald M. Weinberg's *Computer Programming Fundamentals* (McGraw-Hill, 1961); though oriented toward business systems using the IBM 7090 computer, its discussions are pertinent to any kind of programming.

As you become more sophisticated, try the John Wiley "Information Sciences" series, particularly Joseph Becker and Robert M. Hayes' *Information Storage and Retrieval: Tools, Elements, Theories* (1963) and possibly Charles P. Bourne's *Methods of Information Handling* (also 1963). Both of these works are valuable for the connective links which they establish between traditional library operations and information retrieval.

As many of you are aware, the Winter 1965 issue of *LRTS* featured a series of papers forming an "Introduction to Data Processing." These illustrate a trend in the information science field, namely, the heavy reliance upon conferences as a medium of data-exchange in this rapidly-developing area. The published proceedings of many of these conferences are uneven in quality and require a kind of discretion for evaluation which most catalogers do not possess. Often they describe highly specialized systems which only confuse or bore the beginner.

One of the controversies which catches the imagination of the philosophically-minded catalogers is the Cranfield experiment on the comparative efficiency of indexing systems. Discussion has waxed hot ever since the publication of the basic reports on the study conducted in England by Cyril W. Cleverdon and associates for Aslib under a grant from the National Science Foundation. In structuring an experiment on the retrieval power of four systems—U.D.C., alphabetical subject

headings, a faceted classification, and Uniterm—Cleverdon devolved a methodology which has been subsequently attacked. Librarians catalog the 1962 *Report* under "Aslib [period] Cranfield Research Project [italicized]" but you will find it indexed in *Library Literature* under the direct heading "Cranfield research project."

If you are willing to have your prejudices about subject cataloging shaken, search out the articles on keyword-in-context indexing. Catalogers are prone to dismiss this machine-oriented technique as inferior to an alphabetical subject heading approach; however, there is considerable evidence to suggest that—at least in specialized subject fields—the keyword may serve the user equally well or better, with the computer doing most of the preparation.

Some of us lack sufficient self-discipline to pursue a "do-it-yourself" educational program; for us a third strand is necessary: (3) a structured educational experience. Announcements appear continually in *Library Journal, ALA Bulletin,* and other professional periodicals, about institutes on information retrieval and conferences on mechanized library procedures. One is usually available during every season of the year, and they vary in length from a single day to several weeks. Library administrators even surprise their staff members occasionally and volunteer to pay all or part of the expenses incurred in attending such institutes. The investment will generally not be wasted even if it leads only to the discovery that "machine" people are essentially no different from anyone else: some of them are likeable, and some obnoxious; many are intelligent and dignified, while others are only moderately bright and extremely noisy. The reward of retrieval conferences often lies in the achievement of familiarity with new terminology and in the coffee-hour discussions which introduce you to other librarians and to information specialists whose problems and concerns match your own.

Should you really become fascinated by information retrieval, arrange to take a brief leave so that you can enroll in a formal course. Again, many administrators would be sympathetic to such a request. If not, you might invest your summer vacation in that kind of experience. Choose your school carefully enough and you may even be able to combine education with recreation.

A fourth possible strand for our bridge is (4) the opportunity for practical work with machines and systems of information or citation retrieval. This does not necessarily entail the rental or purchase of expensive equipment just to "play with." What it does suggest is that you might request a month or two in which to work with an installation —preferably one similar to your own—that is already using data processing equipment or computer-controlled systems. We have perhaps overworked Florida Atlantic University and the National Library of Medicine as popular visiting spots. It might be better to "spread the attention around" and actually spend more time learning the pitfalls to avoid, in somewhat less elaborate machine installations. One of the major contributions which the new ALA Information Science and Au-

tomation Division might make would be the establishment of observation centers for different types of libraries in various sections of the country so that librarians could study and even manipulate some of the machinery appropriate to information retrieval systems.*

Unfortunately, even while we are busily engaged in building a stable, albeit temporary, bridge over the gap between catalogers and information specialists, there are nefarious forces at work fraying and even breaking our carefully-constructed strands. For each of the strands we can discover at least one divisive counteragent. In the first place, the cataloger's enthusiasm about the prospects for information retrieval may be cooled by those about him who display a rash eagerness to acquire machines in the library. Some of our colleagues are so afraid of appearing too conservative that they equate modernization with mechanization. To be sure, there are corrective agents at work, particularly librarians who have been disillusioned by the unproved claims of equipment salesmen; but there are still administrators who authorize the purchase or rental of a keypunch simply because they feel that they must "automate" or be out of step. Librarians sometimes allow themselves to be bullied into adopting machine-oriented systems which they do not really want or need, for example, the "SDI" (Selective Dissemination of Information) system so highly touted by IBM. SDI has distinct advantages in certain situations; however, it is reported that its greatest popularity was with deans of medical schools in which the librarians knew so little about the system that they could not assess its value. Thus they went along with the installation lest it be thought that they were unprogressive.

Another piece of this divisive influence is the "I hate machines" attitude held by some librarians. A person of this bent usually keeps a stock of stories about spectacular machine failures and is disdainful of all information specialists. He regularly points out that his library prefers to spend its money on good old-fashioned books, not waste it on a bunch of mechanical junk. It is interesting to note that he also generally does not favor the incorporation of audio-visual materials into libraries; and he probably brags about *not* watching television. Unfortunately, there are librarians who *feel* this way but refuse to discuss the matter; although the antipathy is real, it may never be debated or even acknowledged. As a result, their libraries will probably become farther and farther out of phase with contemporary society.

A situation which tends to cut the strand of "self-education" in the field of information retrieval is the poor quality of the literature. Documentalists have created a jargon which is extremely difficult for the novice to interpret. Add to this the fact that even the specialists are sometimes unable to communicate successfully with each other, because they are too narrowly associated with their own corporations. They can

* Editor's note: The ISA Division is planning a pre-conference institute for San Francisco.

describe a specific installation or line of equipment, but they frequently are powerless to draw general conclusions about the relationship of their equipment to that already in use or to predict the applicability of a new design to tasks for which it was not specifically constructed.

At the other end of this divisive force are the information scientists whose speculations are so esoteric and technical that they are unintelligible to the majority of practitioners. Their theories have, for the most part, no obvious relation to the common—or even uncommon—seeker of information. Honored, perhaps, for their erudition, their works bear little resemblance to the problems posed in a busy reference library.

A third divisive influence—one which affects both the librarian's program of self-education and his possible enrollment in formal courses—is the librarian's self-image. Although today's library school students are less prone toward self-deprecation than they once were, many practicing librarians—particularly women—maintain that they cannot possibly understand electronic machines, that they never have been mathematically or mechanically inclined (they have trouble changing typewriter ribbons), and that they are too old to learn anything new. There is really no answer to such an avowal; the ones who feel that way will probably *not* be able to learn much about information retrieval or data processing. It is useless to try to assure them that extensive mathematical training is not nearly so necessary as an ability to follow a logical sequence of steps. A good programmer must be able to think conceptually, but so must good catalogers especially in selecting classification numbers. It is likely that any cataloger who is more than a "clerk" in his approach to his discipline will have the requisite ability to grasp the principles of information retrieval systems and machine operation. Some people are surprised to learn that many of the most competent programmers and systems designers are women.

A fourth "strand-frayer" is the instability of the whole field of information retrieval and its associated machinery. This does not imply that the equipment is not durable, but rather that the technology is changing so rapidly that knowledge about the machines is outdated almost as quickly as it is acquired. Thus a librarian who has studied a particular installation is apt to discover that a whole new system has replaced, within a year of his visit, the one which he observed. Much equipment is obsolete within five years of its marketing date—which yields a good argument for renting rather than buying.

Not only is the machinery obsolescent, but also the larger systems of information retrieval are being continually refined and redesigned to handle greater volume and complexities of data. Some of the mechanized operations tend to falter when the materials collection becomes larger than was initially anticipated. Occasionally, specifications have to be rewritten even before the system becomes operational, as witness the contract renegotiation between Baltimore County Public Library and Documentation, Inc., for a computer-produced book catalog. Their time and cost estimates had evidently not been realistic in comparison with

the actual volume of the work. Under the new contract, some possibly desirable characteristics of the book catalog had to be eliminated or modified. Given the initial uneasy relations which often exist between librarians and information specialists, such problems can destroy—or at least fray the ropes of—any temporary bridge.

Eventually we will need to construct a permanent span across the gap or—if possible—fill up the chasm. Many information specialists now recognize that they can avoid certain pitfalls if they will talk with librarians during the early stages of constructing a system. Librarians, on the other hand, are increasingly concerned lest they become, as Paul Dunkin has said in another context, "dinosaurs on the freeway." This climate bodes well for communication.

In order to build a durable bridge, beginnings must be made from both sides. First, the information specialists must learn that their interests are contiguous with those of librarians and that not all librarians are "anti-machine" in attitude. In fraternizing with librarians, the documentalists must avoid snobbishness since librarians—especially catalogers—rightly object to condescension. A bit less bragging and a great deal more honest discussion would be welcome at many information retrieval conferences and institutes.

Second, the documentalists and equipment experts must eliminate some of their internecine competition and develop a literature which is more comparative and evaluative in nature. Existing literature often confines its attention to the description of a particular system and its components; it fails, however, to acknowledge the possible disadvantages of the system or to suggest other types of equipment which might do the job equally well. The highly competitive spirit of the computer business tends to discourage comparative study, except on "non-aligned" university campuses.

Third, the information specialists should interpret their discoveries and inventions in more popular language so that the layman can at least understand the "state of the art." Not only librarians, but also members of other professions would welcome the advent of books and articles which prune away the technical expressions and explain the field with candor and even a touch of humor. Some of the men who write for *Datamation* are particularly clever at lampooning their own discipline and ought to be encouraged to write for mass consumption.

Conversely, from the librarians' side of the gap there must come a more knowledgeable and sophisticated attitude toward information retrieval than has been noted thus far. The cataloger may rightly fear that his job, as he *now* performs it, will disappear. He need never be afraid, however, that the operations which characterize truly effective cataloging will cease to be required.

Two trends are evident in the libraries of today: continued centralization of technical services until a point of diminishing management returns is reached, and a shift from interest in cataloging *per se* to an active concern about total bibliographical control of materials and in-

formation. On the basis of these trends, pushed to their logical conclusions, the cataloger of the future can expect one of two things to happen to him: (1) he will work in a large, central unit, cataloging essentially to produce an identification or "finding list" of materials in the collections which he serves and be occupied primarily with the administration and management of a sizable non-professional staff; or (2) he will be employed as an information specialist (or "bibliographer") with responsibility for the identification and control—for retrieval purposes—of all types of literature in a particular field. In the former assignment, the cataloger will make use of electronic equipment to handle repetitive operations; in the latter, he will probably be interacting with advanced computers and peripheral equipment in order to construct a bibliographic system which will serve the entire nation or the world as a whole.

Such a picture may not be attractive to some of us; however, we must compare its possibilities with the present-day effectiveness of our cataloging. Many of us are aware that at least part of the work which we do *could* be accomplished by a well-trained and alert clerical assistant. Sometimes we even question the value of the cards that we prepare, especially the 576th subject card with the heading U.S.—HISTORY—CIVIL WAR. In a more heretical vein, we occasionally wonder whether anyone really understands the way in which the cards are arranged in the catalog.

The catalogers who harbor such doubts have already begun to build a span between themselves and the information specialists. Their bridge will ultimately consist of three portions; and—like the cathedrals of old—it will probably have to be completed by future generations.

The first section will be a type of library education which views the library as part of a total system of information storage and retrieval. Such education is likely to place less emphasis upon cataloging skills and more upon the needs of patrons in relation to the bibliographic listings available to them. The cataloger may have to be trained as a reference librarian so that he will be able to engage in a dialogue with his patron in an attempt to identify and locate the material required; thus the cataloger will be learning how to work with both patron and bibliographic equipment—be it a book or a computer console—in a "live" situation. The "feedback" from such experiences will point out the weaknesses in the bibliographies and in the information system. Education in this context will necessarily include some attention to the psychology of interviewing, theories of bibliographic identification and control, the acquisition of specialized knowledge in particular subject fields, and the development of operational nationwide and worldwide communication networks.

The second section of our permanent bridge will involve the reorganization of existing libraries to allow, administratively, for a system of information storage and retrieval to be adopted. This will entail reeducation of staff and the consolidation of some duties into positions

which will negate the traditional technical-public services split in many of our large libraries. The catalogers, along with the remainder of the staff, must rethink purposes and procedures in order to devise a system which will offer a totality, rather than mere fragments, of service. Is there really any particular merit in forcing the patron to ferret out a sequence of isolated services when his needs could be more effectively met by a "package deal" presented to him at one location?

The third and final section of the bridge will be the regrouping of libraries along geographical *rather* than typological lines. Perhaps this is inconceivable under current conditions, but the idea involves the elimination of public and school and academic and special libraries in favor of neighborhood, city, county, regional, state, and national libraries which will function as information materials centers. To be sure, the administrative—not to mention the political—implications of such a proposal are staggering; however, under such a plan our gap would once for all be closed. The information specialist—serving as, to some degree, both a cataloger and a reference librarian—would work with his patrons locally, feeding back his experiences to colleagues in the larger centers, who in turn adjust the system to meet new or revised requirements. The reassuring note is that catalogers, whatever they may be called under the new system, will still be needed at every level.

This, then, is the architecture of my proposed bridge. Perhaps you object to certain facets of its construction or design. If so, I can only suggest that you acquire another architect—or, better yet, try to build a bridge of your own!

LIBRARY MANAGEMENT INSTITUTE

The Emory University Division of Librarianship will sponsor a four-week Library Management Institute, July 24-August 18, 1967. The Institute will be conducted by Jewel C. Hardkopf, Library Management Consultant, who will bring to the Institute a successful background as librarian, teacher, and consultant to libraries, library boards, and library systems.

Designed for librarians with supervisory responsibilities, the Institute will give attention to analysis of library processes, efficient use of personnel, and the application of management principles and techniques from business and industry. Application will be open to professional librarians in supervisory positions from public, school, academic, and special libraries, and will be limited to thirty full-time registrants.

The registration fee for those who do not seek academic credit will be $150.00. If academic credit (5 quarter hours) is desired, the fee is $195.00 (plus a $10.00 application fee if applicant has not applied previously for graduate study at Emory). Campus housing will be available at a cost from $1.50 per night.

Inquiries, including request for application forms, should be addressed to Director, Division of Librarianship, Emory University, Atlanta, Georgia 30322. May 1,1967 is the deadline for making applications. Notification of acceptance as an Institute participant will be completed by June 1.

RESOURCES AND TECHNICAL SERVICES DIVISION COPYING METHODS SECTION

PROPOSED AMENDMENT TO BYLAWS

Article I. Name.

The name of this body is the Reproduction of Library Materials Section of the Resources and Technical Services Division of the American Library Association.

Article II. Object.

The object of this Section is to assist libraries by providing an organization for (1) the discussion of problems in the dissemination of information about the production, storage, and use of reproductions of library materials; and (2) the fostering of studies and research and the promotion of uniform practices and policies in this field.

SERIALS SECTION

PROPOSED AMENDMENT TO BYLAWS

Article X. Discussion Groups.

Sec. 1. Establishment. Any group of ten or more members of the Section interested in discussing common problems which fall within the object of the Section may form a discussion group upon written petition from the group, and upon approval of the Executive Committee. The petition shall include the purpose of the group and the requirements for membership, if any.

Sec. 2. Membership. Membership is open to members of the Section who are interested in the purpose of the group and who fulfill the requirements for membership in the group.

Sec. 3. Officers. Each group shall elect a chairman annually. In addition to his regular duties, the chairman shall see that the group's activities are limited to discussion of matters of common interest and concern in accord with the purpose of the group, that the group engages in no activity in conflict with the program of the Section, and that the Section Bylaws are observed by the group.

Sec. 4. Discontinuance. Each group shall continue in existence until its usefulness has ceased when it shall be dissolved by action of the Executive Committee.

Change in numbering of Article X to XI, XI to XII, and XII to XIII.

PRE-REGISTRATION FOR THE SAN FRANCISCO CONFERENCE

Persons planning to attend the ALA San Francisco Conference in June will be able to pre-register by completing and mailing a form to be included in the April issue of the *ALA Bulletin*. Pre-registration will be accepted for the full conference, June 25 to July 1, only. A check for $7.50 covering the registration fee for personal members of ALA, or $12.50 for non-members, must accompany the application.

An official receipt will be mailed to the applicant together with a stub to be presented at the registration desk in San Francisco in exchange for the official program and other Conference materials.

The deadline for pre-registration will be May 31, 1967.

Computer-Produced Book Catalogs: Entry Form and Content

EDWARD A. WEINSTEIN
and
VIRGINIA GEORGE
Boeing Scientific Research Laboratories
Seattle, Washington

IN AN EARLIER PAPER,[1] we considered a variety of factors which, taken in sum, demanded a reappraisal of the basic content and purpose of computer-produced book catalogs. We reasoned that the economics of the medium must focus attention on the nature of the form and content of the catalog, and indicated some directions which changes might take. Having existed in a card catalog environment, it is difficult actually to restructure the substance of the catalog, even when the need is recognized and the means are available. It is significant that interest in computer-produced book catalogs remains high, even though the essential economics are cloudy and the range of possible applications, particularly for large collections, seems inhibitive. Both economic factors and effective applications, however, return us to the problem of the basic content and purpose of the catalog.

It has been established that printing is the major identifiable cost of the computer-produced catalog for distribution. Since printing cost is a simple function of the total number of printed characters, or the number of pages, and as these are the result of the utilized entry forms in relation to collection size, then the specific form and content of entries becomes a major cost determinant. These specific entry forms can be considered as the predefined set of bibliographic elements essential to the purpose of the particular catalog. Given the assemblage of bibliographic data from which entries must be constructed, and the economic imperatives of the computer-produced book catalog, a simple principle of data choice for entry definition follows. Let entry be the shortest, physically smallest, least inclusive set of bibliographic data consistent with the needs of real use. This is not to deny the value of each bibliographic element now included on library cards, typically Library of Congress cards, but rather to question the necessity of their repetition throughout the entry set. This has long been acknowledged in the "short form" card entry, and needs only to be extended into a plural domain which might be characterized as "short forms sufficient unto the needs of particular entries."

It might be offered as an objection that the completeness of information on the standard unit card is a precise virtue in that no further consultation of records is necessary for the identification of desiderata.

This cannot be contested, beyond insisting that this virtue, as such, is self-defeating for the medium under discussion. Specifically, by sacrifice of such data we obtain lower printing costs and gain reproduceability which, in addition to consultability, is a virtue unique to the printed book catalog. If the approach is obvious, it has received little consideration in the library milieu.

Furthermore, one necessarily assumes that a catalog must satisfy, within reasonable limits, a variety of needs. These might be polarized between the use of the catalog as a finding list and its use as traditional bibliography. Intuitively, the former represents the great preponderance of use, yet the latter remains a feature and value of the unit card because of its unique economy. In terms of this economy, no loss is incurred by repetition, and it is certainly essential, at least in research libraries, that much of this be retained. The problem thus becomes one of producing a printed book catalog that retains these essential features, yet does not impose an unnecessary volume of characters upon the printing (reproduction) system, or likewise on the storage and processing facilities of the computer. We believe this to be entirely possible, and not as the result of an excessive compromise. The approach we suggest has the added virtue of partially circumventing the single-case obstacle, in that we are suggesting the means whereby multi-case is retained in the bibliographic portion, and the single-case line-printer font in the finding lists portion.

We propose a catalog consisting of a basic section of complete bibliographic records, supplemented by computer-generated indexes. It is in these indexes, designed to satisfy the finding list requirement, that our notion of minumum data entries is to be implemented. Two major assumptions underlie this approach. It is assumed that a paper-tape punching typewriter is used as the input medium preparation device, and that computer programs are available which permit efficient natural language storage, processing, and selective content entry formation. We possess such programs, although they are not being utilized to produce catalogs of the exact configuration proposed here. An extension of the second assumption is the availability of a large computer, if the job is to be done with reasonable efficiency and a minimum of human intervention.

Paper tape, as a computer input medium, is not beloved of the data processing community. The reasons for this are partly obscure, partly justifiable, and in good part simple inertia. That it is a particularly attractive medium for input in bibliographic data processing is becoming quite apparent. It is receiving strong consideration from the Library of Congress, and has been adopted by the larger institutions which are presently active in this field, such as the Atomic Energy Commission, the Defense Documentation Center, the National Library of Medicine, and also in a pilot experiment being currently conducted by a West-Coast book supplier and several universities. The advantages of paper tape can be readily summarized. On a standard keyboard, one

has available a larger set of characters, plus double case, than on card punching devices. Additionally, the tape-punching typewriter produces important intermediate or primary copy, is readily adapted to by a typist of ordinary skill, and for bibliographic data, is probably a higher output device.[2]

This proposed catalog configuration indeed requires the use of a tape punching typewriter, such as the Friden Flexowriter, programmed so that only data which is to be computer-manipulated is punched for computer reading. Specifically, the basic list of this catalog might be considered an accessions list, with entries containing the total bibliographic complement. This list is to be solely a Flexowriter product. Key to the list would be of course a serially incremented accession number. As entries to this list are added, in accessions order, they can be added to the basic list on a page-by-page basis, with reproduction of new pages only necessary to update distributed copies of this section of the catalog. Punching for computer input and subsequent index preparation can be readily controlled with a tape-typewriter program.

Bibliographic elements so punched would be the sum of those necessary for the chosen, machine-generated, entry sets or indexes. This conception of the catalog retains some resemblance to the main entry concept in that Library of Congress unit card data is utilized to form the basic entry, although somewhat different ends are served.

Given this catalog configuration, we contend that the basic problem of printing costs is at an irreducible physical minimum, controlled by the individual selection of minimum content entries. By eliminating a certain repetitive mass of bibliographic data, more efficient computer usage becomes possible. We have, to this point, emphasized what seem to us the imperative principles involved in the effective production of printed book catalogs. With the possible exception of the catalogs produced by Bro-Dart, Inc. for the St. Louis (Missouri) Junior College District[3], no computer-generated printed book catalog being produced, to our knowledge, exploits these principles. Not even our own does entirely, although we do use the approach for an experimental catalog of technical reports. Looking outside the library field, examples of this approach are very common indeed; and it is significant that these examples are the result of precisely the same economics which burden the machine-generated list for a library application. Specific examples are readily found among the products of the major abstracting services.

Further options emerge also, if our concepts of catalog formation be considered. In preparing an index to bibliographic records, one need be less bound, in the index formation, by the rules which govern the data sequence of library catalog basic entries. Likewise the formalism governing subject entries can be relaxed to include informally titles and portions of titles as legitimate bearers of subject indication, where appropriate. An example of this can be noted in Figure 4, the "Permuted Title Entry."

To develop our proposal in more graphic terms, consider Figures

1, 2, and 3. These three levels of copy are obviously related, and all result directly from the Flexowriter platen. Figure 1 represents the initial keyboarding level, providing proof copy for error correction. The punched paper tape, containing programmed flexowriter punch and carriage codes, produced by this keyboarding is run again, errors are corrected, and paper tape equivalents of Figures 2 and 3 produced.

Figure 2, the computer input record, directly complements Figure 3, the basic bibliographic entry list. Figure 2, in relation to Figure 3, should be considered functionally as the equivalent of the tracings on a main entry catalog card, in that it records the encoded data for the computer produced lists (Figure 4). The computer data codes are apparent on Figure 2, as follows:

New Record

$N	Accession number
$L	LC number
$A	Author
$T	Title
$S	Subject
$D	Publication date
*	Title permutation code

To repeat, the paper tape equivalent of Figure 2 serves as computer input. It is from this string of preselected and encoded data that entries are to be formed on the computer generated indexes (see sample entries in Figure 4). On the basis of the present example, author entries, using the above codes to indicate included data segments, are computer formed via the assembly path A-T-D; title entries via T-A-D; subject entries as S-T-A-D. For simplicity and convenience, no distinction has been made between personal and corporate authors, and series entries are encoded as titles. Under some circumstances, even briefer content could be specified; or conversely, if more data elements are initially coded, content can be expanded to taste.

Figures 1 and 2 can be considered "process" or "housekeeping" copy. Figure 3, the basic bibliographic list, is the central public record of this catalog. As it is essentially a transcription of a Library of Congress card, it resembles a conventional main entry, and indeed it so functions, for it contains all significant bibliographic data, subject to no size restriction. Being Flexowriter keyboard and platen generated, it contains a generous character set, and serves as final back-up to the computer generated indexes. The fact that this list results from a simple pass of previously produced tape through the Flexowriter reader and is neither computer produced nor revised is a major economic factor. Considering its resemblance to the norm, it would be heart-warming to consider receiving such paper tapes from a central processing agency in the implementation of this proposed catalog scheme. Much keyboarding time could be saved in the process of editing such remotely supplied tapes for local application.

Figure 4 represents samples of computer-generated entry types rather than replicas of computer output printing. In actual practice this would be a double column format utilizing 85 print lines and photo-reduced so as to rectify the toppled rectangle of normal output sheets. As we have developed computer programs for the IBM 7094 which are but a minor step from the presently proposed catalog scheme, and have adapted Flexowriters to quite similar tasks, we are not presenting yet another optimistic fruit. What is proposed is in fact simpler than our present small-scale operating system.

It is of interest to us that this approach to catalog formation implies no reflection on present practice and codes. No change would be required as such in the proven definitions of the common bibliographic elements. Yet we suggest that this configuration is not a direct analog of the present card catalog, but rather a graphic restructuring of the catalog, so that the nature of its real use is related to machine possibilities—or better—limitations. It is the specter of the book catalog as a room-filling mammoth of paper, and subsequent baskets of money to pay the printer, which needs our concern, if the medium is to find application outside of small or special libraries. This image is an all too easily achieved result of a direct, or analogous, extrapolation of the card catalog into list form, unless careful attention is directed to the forms and content of entry. It is not the next generation of hardware that offers the final solutions, but rather more imaginative use of the means at hand.

@$N 205720 $L RC1085.A7

$A Armed Forces-NRC Committee on Bioastronautics.
Sensory and perceptual problems related to space flight; report of a working group of the Panel on Psychology. Edited by John L. Brown. Washington, National Academy of Sciences, National Research Council, 1961.
vii, 51 p. 25 cm. (National Research Council. Publication 872)
Bibliography: p. 28-41.
$A Brown, John Lott, editor
$T Sensory and *perceptual problems related to space flight
$T National Research Council. Publication 872
$S Space flight
$S Human engineering
$D 1961

Figure 1. Proof Copy, Initial Keyboarding

@$N 205720 $L RC1085.A7

$A Armed Forces-NRC Committee on Bio-astronautics.
$A Brown, John Lott, editor
$T Sensory and *perceptual problems related to space flight
$T National Research Council. Publication 872
$S Space flight
$S Human engineering
$D 1961

Figure 2. Image of Computer Input Tape

Item no.	*Shelf no.*	*Description*
205720	RC1085.A7	

Armed Force-NRC Committee on Bio-astronautics.
Sensory and perceptual problems related to space flight; report of a working group of the Panel on Psychology. Edited by John L. Brown. Washington, National Academy of Sciences, National Research Council, 1961.
vii, 51 p. 25 cm. (National Research Council. Publication 872)
Bibliography: p. 28-41.

205721 TL571.5.H3

Hayes, Wallace Dean.
Hypersonic flow theory [by] Wallace D. Hayes [and] Ronald F. Probstein. New York, Academic Press, 1959.
464 p. illus. 24 cm. (Applied mathematics and mechanics, v. 5)

Figure 3. Entries on Basic Bibliographic List

ARMED FORCES-NRC COMMITTEE ON BIO-ASTRONAUTICS.
SENSORY AND PERCEPTUAL PROBLEMS RELATED TO SPACE FLIGHT . . . 1961. 205720 RC1085.A7

(Corporate Author Entry)

HAYES, WALLACE DEAN.
HYPERSONIC FLOW THEORY. . . 1959. 205721 TL571.5.H3

(Personal Author Entry)

AERODYNAMICS, HYPERSONIC
HYPERSONIC FLOW THEORY. . . HAYES, WALLACE DEAN. 1959. 205721 TL571.5.H3

(Subject Entry)

APPLIED MATHEMATICS AND MECHANICS, V. 5
HYPERSONIC FLOW THEORY . . . HAYES, WALLACE DEAN. 1959. 205721 TL571.5.H3

(Series Entry)

PERCEPTUAL PROBLEMS RELATED TO SPACE FLIGHT. . .
SENSORY AND
ARMED FORCES-NRC COMMITTEE ON BIO-ASTRONAUTICS. 1961. 205720 RC1085.A7

(Permuted Title Entry)

SENSORY AND PERCEPTUAL PROBLEMS RELATED TO SPACE FLIGHT. . .
ARMED FORCES-NRC COMMITTEE ON BIO-ASTRONAUTICS. 1961. 205720 RC1085.A7

(Title Entry)

Figure 4. Computer-generated and Printed Entry Forms

REFERENCES

1. See our paper "Notes Toward a Code for Computer-Produced Printed Book Catalogs," *Library Resources & Technical Services,* 9:319-324. Summer, 1965.
2. Sievers, Patricia T., and Fasana, Paul J. "Automated Routines in Technical Services," Air Force Cambridge Research Laboratories, *AF CRL Research Report* 64-70. February, 1964. (AD 435 615)
3. Jones, Robert C. "A Book Catalog for Libraries—Prepared by Camera and Computer," *Library Resources & Technical Services,* 9:205-206. Spring, 1965.

Automated Acquisitions Procedures at the University of Michigan Library

CONNIE DUNLAP, *Head*
Acquisitions Department
University of Michigan Library
Ann Arbor, Michigan

IN JUNE, 1965, the Acquisitions Department of The University of Michigan Library began using a computer-based system for ordering books and other library materials. This is the beginning of an over-all automated system for the Acquisitions Department and was designed with the assistance of Robert O. Kindt,* Systems Analyst from the University's Office of Management Services. Preliminary work on the automated system was begun in late 1963, and in September, 1964, Mr. Kindt was assigned to the University Library on a full-time basis. After the preliminary proposal was drafted, cost and feasibility studies were made. Current (i.e., 1964) volume and costs were compared with anticipated volume and costs in 1968 and 1975 for both manual and automated systems.

The studies showed that although an automated system would be more costly at the present time, it would be possible to increase volume considerably in the future without substantially increasing clerical staff. One of the greatest savings anticipated is virtually impossible to measure because it will come from the people we will never have to hire and rehire, train and retrain. Because Ann Arbor is a fairly small city and has no large labor market, the University Library must rely very heavily on students and student wives. Consequently the caliber of the employees is very high, but they are at best only temporary, causing the turnover rate to be also very high. A further savings will be realized in floor space and equipment. Information is being gathered to permit further cost studies at a later date.

Through the courtesy of IBM, a twenty-hour class session on the principles of automation was held in October, 1964. In addition to Acquisitions Department staff, personnel from most other departments and units attended the classes. By December the final proposal was presented to the Director for approval. Then the arduous task of adding the detail to the program and familiarizing the staff with the system was begun. Several meetings were held to keep department personnel informed on the system's progress and two general meetings were held for other interested members of the library staff. When the programming was begun in March, intensive training of the staff to be directly in-

* Mr. Kindt became Research Coordinator, Detroit Public Library, on December 1, 1965.

volved was also begun, operations manuals and exceptions procedures were written, and three members of the processing staff attended key-punch classes at IBM in Detroit.

The procedures described here are part of an over-all automated system for the Acquisitions Department and ultimately for the entire library. Other automated procedures to be investigated will include an on-line serials record, circulation, the shelf list, and possibly the public catalog. The system in operation now includes order writing, the maintenance of an outstanding order record, and accounting procedures. Equipment being used is the IBM 026 printing key punch, the 1460 tape computer and allied equipment including the 1311 disk pack in addition to other sorting and collating equipment.

With trained key punchers on hand, it was possible to begin conversion of the vendor address file. Since this was a necessary step before any orders could be processed, it was important to complete it at an early date. The existing vendor file with some additions and deletions was used to assign five-digit numbers at intervals of forty to permit future interfiling. For vendors which are little used and are not to be added to the permanent file, temporary vendor numbers are assigned by Data Processing and are cancelled when the order is deleted. Such numbers are four digits preceded by a "T".

After the order request is searched and the dealer assigned, ten types of information are coded before the order is punched. In addition to indicating the type of information to be coded, each block contains the numbers of the card columns into which the information is to be punched (Figure 1). The order is punched into cards coded 11-21 (Figure 2). The bibliographic information is restricted to forty columns on each card in order to fit the order on a 5×3 purchase order packet (Figure 3). Since seven of the ten parts are used by the Catalog Department for temporary cataloging records, it was necessary to retain this size. The author, and as much of the entry as can be accommodated in forty columns, is punched into the 11 card and is continued on additional cards if needed. The remainder of the bibliographic information is punched into as many cards as needed through card number 21. A dash in column 80 indicates the end of the order. The punched cards are sight verified and sent to Data Processing twice weekly. From the punched cards Data Processing produces the ten-part purchase order fanfold, summary cards (Figure 4) to be used in updating the outstanding order record and to handle fund accounting, and outstanding order catalog, on-order-by-fund sheets which are sent to departmental library chairmen and divisional librarians; and the appropriate book funds are encumbered.

The purchase orders are returned in order number sequence within each vendor. The order packets and the summary cards are retained in this order in a receivables file after the purchase order, packing, and numerical slips have been removed. When the ordered item is received, it is sent to the Catalog Department with the original order request slip

showing the searching record, the packet of temporary cataloging records, and one of the pre-punched summary cards (card code 52) which will be used to delete the item from the outstanding order record when the title has been cataloged. Another summary card (card code 50) is sent to Data Processing immediately upon receipt of the ordered volume to indicate in the printed outstanding order listing that the item has been received. The third summary card (card code 41) is attached to the invoice and forwarded to the Accounting Section. The exact price paid for the item is punched into the card before it is sent to Data Processing. At Data Processing the original amount encumbered is disencumbered and the new figure is expended from the appropriate fund. The payment card would also have indicated receipt in the printed outstanding order record (except when advance payment was made); but if invoices were held for any reason, it would have been possible to claim an item already received since the claiming for non-received items is done automatically by the computer according to a pre-determined claim code.

The order type which is coded into each order is actually the heart of the whole system. Book funds are affected according to order type (i.e., books, serials, and binding) and statistical information is gathered and categorized. Monographic titles being added to the collections are counted automatically according to order type. (Serials are counted manually since the majority of volumes are not counted until bound.) The order type is a three digit code; and information indicating whether an order is a monograph, serial, incomplete separate, etc. is contained in the high-order digit, payment information (e.g. pro forma) is indicated in the middle digit, and the final digit is statistical (paper print, microform, etc.).

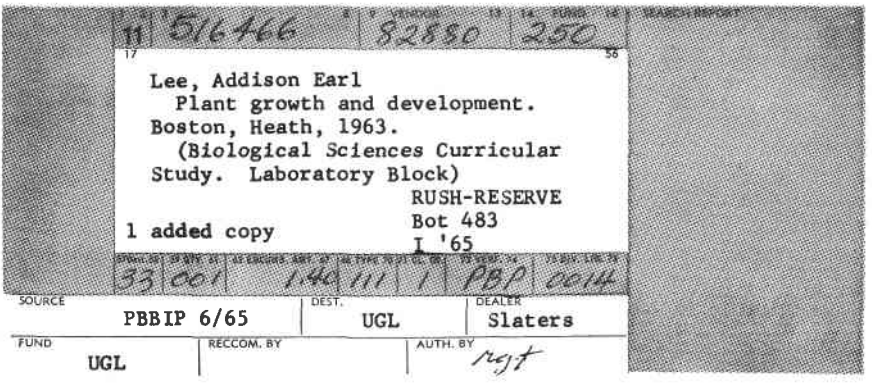

Figure 1. Order request

The outstanding order record is produced in book form on 11 × 14 7/8 ten-part paper and copies are distributed to the searchers, the Processing and Serials sections, and the Catalog Department. Because of the cost of storing an entire page in the computer, entries are printed across the pages, line by line, rather than in usual bibliographic form. Each entry includes complete bibliographic information and special instructions, if any, to the vendor in addition to coded information as shown in Figure 5. A master outstanding order record is printed once a month and is updated each time purchase orders are printed by means of a semi-weekly cumulative supplemental catalog. Transactions such as receipt, payment, comments concerning the status of an order are listed at the end of the supplemental catalogs, but are combined with the appropriate order when a new master is printed.

Each entry in the outstanding order record is alphabetized through the first 83 columns. It was felt this would be sufficient to separate even long corporate entries. To facilitate searching, it was decided to draw all Slavic language orders together into a separate section of the catalog (or ultimately into a separate catalog). This is accomplished by punching "Slavic" at the beginning of the entry. Similarly "Recording" is punched at the beginning of all orders for music recordings. Since recordings may be entered under composer or title, it was felt drawing them together would be helpful to the searcher. Records for orders outstanding in the manual system were not converted. Since the outstanding order file contained about 40,000 items at the time, it was decided to let it die out on its own. Between September and December, 1965, orders of long standing were investigated and either reordered or cancelled. Incomplete separate records were also checked for completeness and closed where possible. Beginning in January, 1966, about 5,000 incomplete separate records on which additional volumes were expected and all other valid orders were converted to the automated system.

Because divisional librarians often expressed difficulty in clearing their own outstanding order files when entries were changed, provision was made for a divisional library code. The use of the code is optional. Those using the coding, mark each order request in numerical sequence through 9999. The duplication of code numbers in other libraries is not important since orders are sorted first by fund. The copy of the order request is filed numerically in the divisional library until the printed "orders placed" list is received. The list shows the entry used in placing the order and permits the divisional librarian to note local records if the entry has been changed. The order request is then interfiled alphabetically by entry. The order request fanfold is perforated in such a way that the divisional librarian can tear his copy into a 5 × 3 slip to fit existing library catalogs.

The possibility of providing records for a controlled backlog of uncataloged items was also programmed for the system. The Catalog Department would select which items were to be placed in a temporary

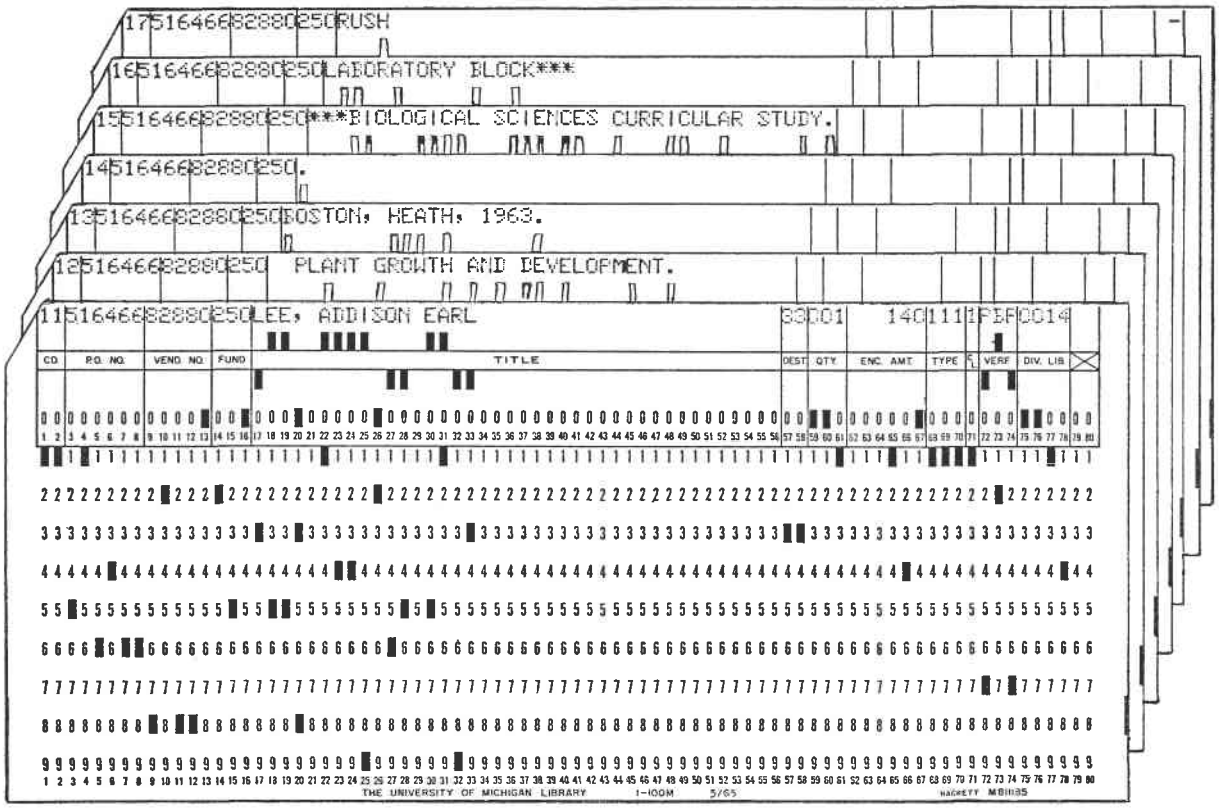

Figure 2. Order cards

backlog and would return the 52 card with the appropriate box marked on the card (Figure 4). A "T" would be punched in column 9 and the card sent to Data Processing where a separate print-out would be made of all such items and would be made available to the public. When the item was finally fully cataloged, a new 52 card would be made to delete the entry from the printed listing. The volumes awaiting cataloging could be shelved in one of two ways. One would be in a closed area arranged by order number with the temporary cataloging packets in the volumes. If it were felt desirable to make the volumes available to the public for browsing, they would be property-marked and the packets removed. The volumes would then be grouped by fund number thus providing a rough subject arrangement except for items purchased on the Director's General Fund. Volumes would either be circulated by order number or cataloged before circulating.

One slip of the temporary cataloging packet would be filed in the Depository Catalog to catch Library of Congress cards. A listing of titles which had been in the controlled backlog more than a specified period would be printed so that the Catalog Department could consider such titles for full cataloging. No part of this system is being used at the present time.

In order to coordinate all activities, monthly cut-off dates were projected for the entire year. This means that the library, the Business Office, and Data Processing are all working with the same base period to permit easier balancing of accounts. After the monthly cut-off, book fund statements (Figure 6), claim notices (Figure 7), and statistical reports are issued and a new master outstanding order listing is printed which includes orders written since the last master and all transactions relating to previous orders but which excludes titles received and cataloged.

In addition to the various monthly print-outs, periodic listings are made of other types of records. Semi-annual listings are made of all "do not claim" orders. Separate listings are made for request quotes, incomplete separates, and standing orders and all other orders coded "do not claim." The lists are issued at intervals during the year to permit easier handling. "Third claims" are also listed so that they may be investigated and a decision made concerning their future status. All payment cards are listed at the end of the fiscal year for retention as part of the permanent financial record.

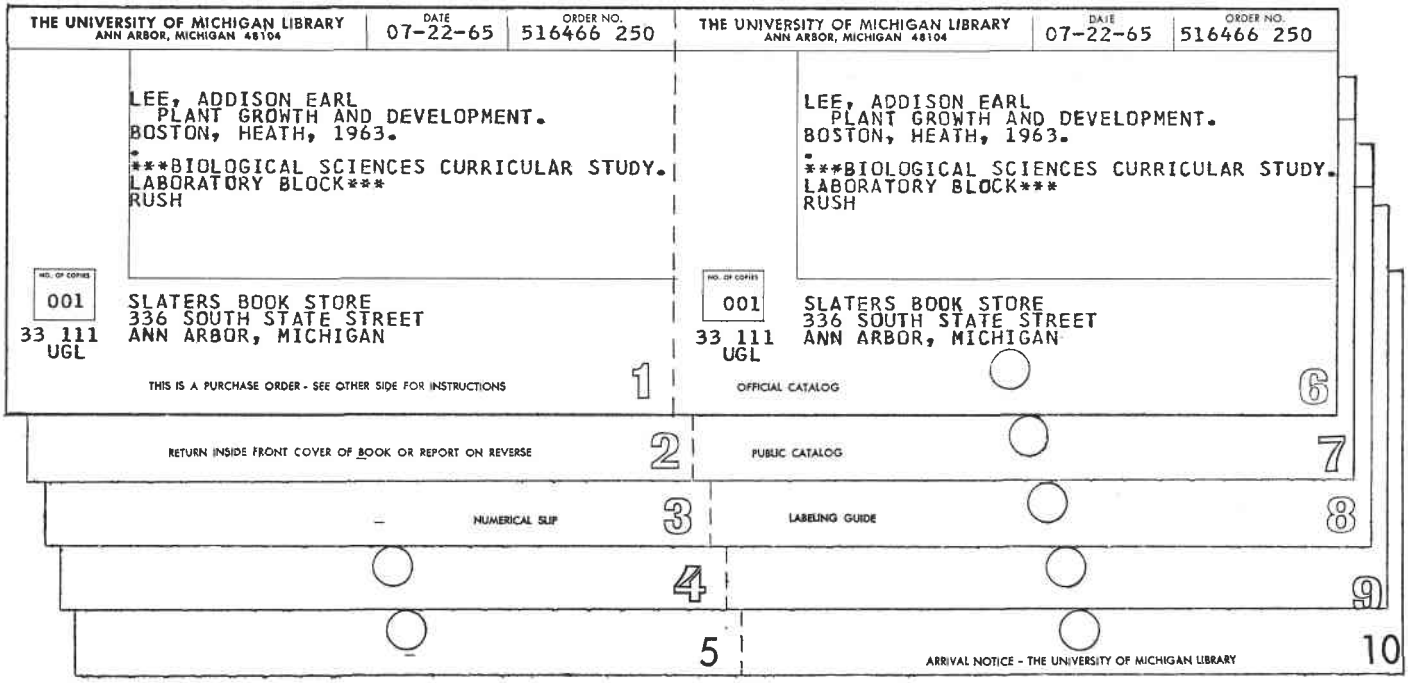

Figure 3. Purchase order packet

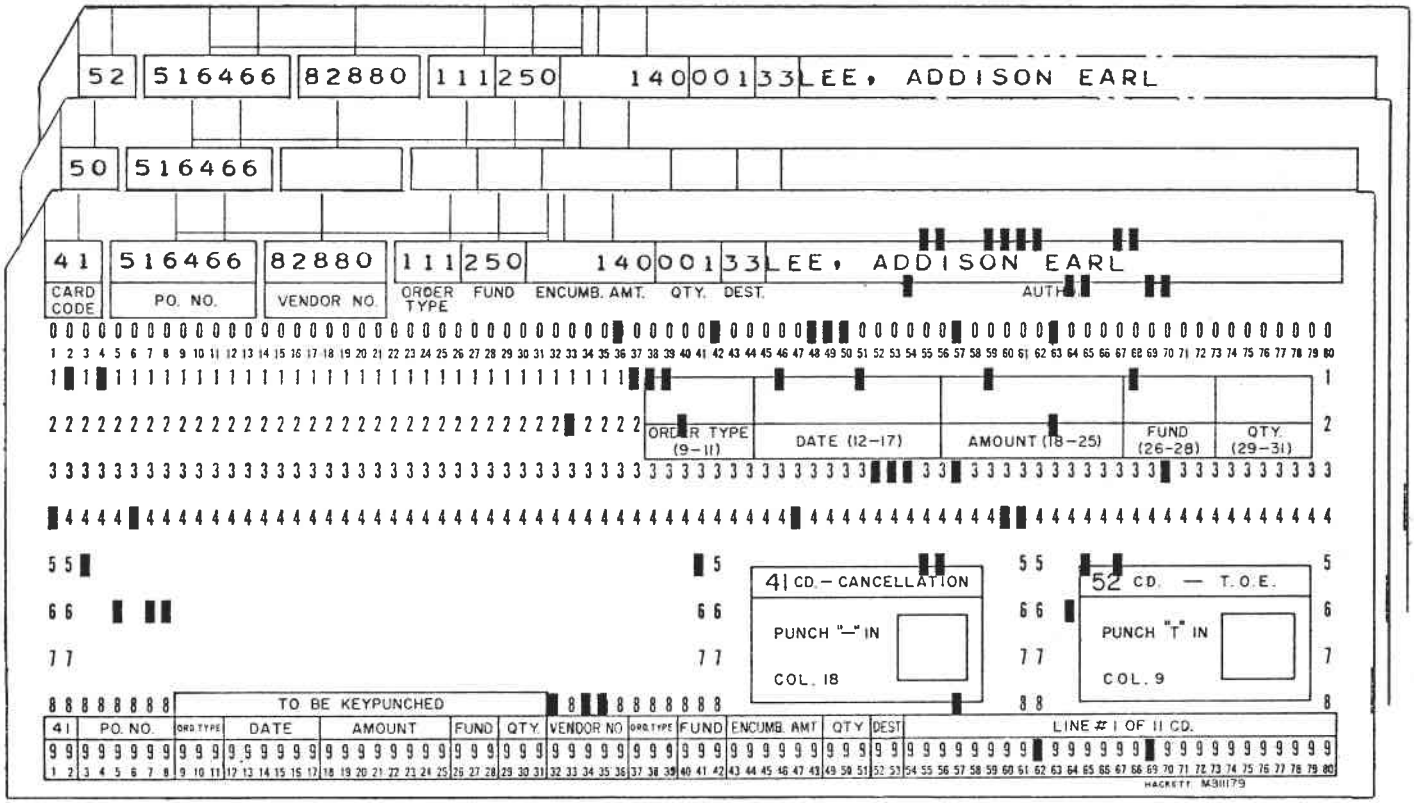

Figure 4. Transaction cards

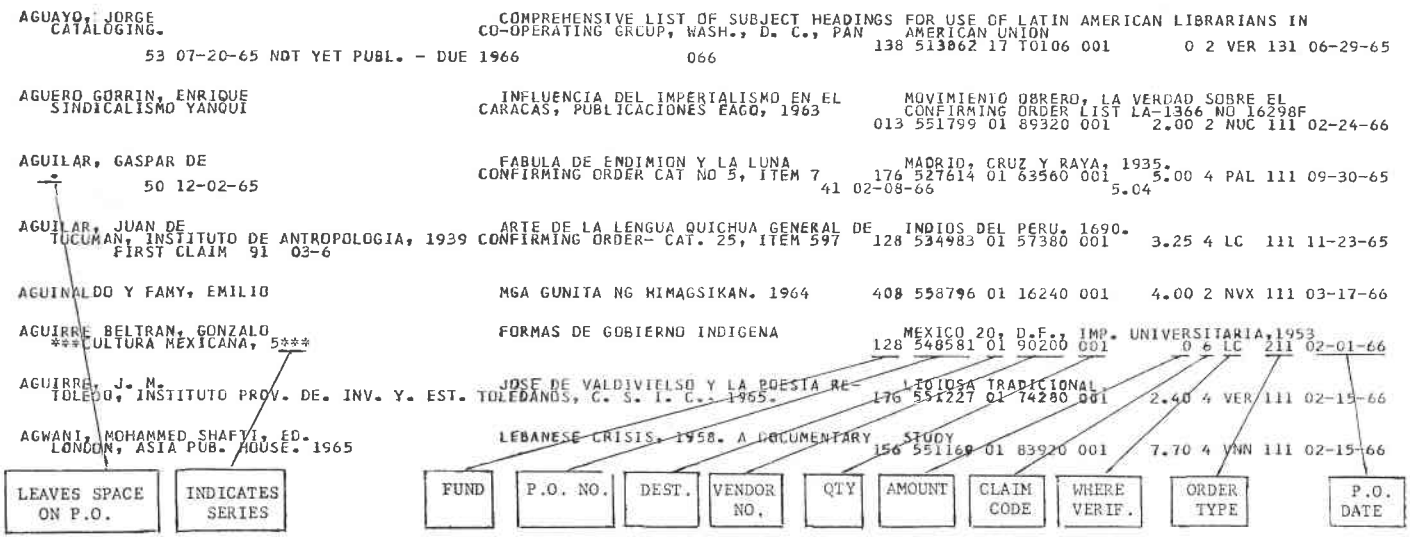

Figure 5. Outstanding order record

THE UNIVERSITY OF MICHIGAN LIBRARY

BOOK FUND STATEMENT

ACQUISITIONS DEPARTMENT

Acct. 250 - UNDERGRADUATE LIBRARY

Date 07-30-65

				TOTALS
1. Allocation for 1965-1966			$10,000.00	
Balance or overdraft from 1964-1965			$ 280.00	$10,280.00
Allocation adjustment				
2. Outstanding orders	Periodicals		$ 760.00	
	Binding		$ 3,220.00	$ 3,980.00
	Books and incomplete separates			
3. Expended since JULY-65	Periodicals		$ 190.00	
	Binding			
	Books and incomplete separates		$ 380.00	$ 570.00
4. Available balance				$ 5,730.00

R. G. FAUCHER 133 UGL

COPY TO:

J. R. SMITH 130 UGL
M. S. JONES 106 GEN. LIB

If you wish further information about this statement, please call Connie Dunlap, Head, Acquisitions, University Library, Phone 764-9370. The above figures do not include cost of books represented by order cards on hand and not yet processed. Outstanding binding and periodicals represent estimates of what will be spent during the balance of the fiscal year. Credits may be book sales, refunds, corrections, etc.

Figure 6. Book fund statement

THE UNIVERSITY OF MICHIGAN LIBRARY
ANN ARBOR, MICHIGAN 48104

CLAIM NOTICE

DATE	ORDER NO.
07-22-65	516466 250

PLEASE REPORT ON UNFILLED ORDER:

LEE, ADDISON EARL
PLANT GROWTH AND DEVELOPMENT.
BOSTON, HEATH, 1963.
.
***BIOLOGICAL SCIENCES CURRICULAR STUDY.
LABORATORY BLOCK***
RUSH

NO. OF COPIES: 001

SLATERS BOOK STORE
336 SOUTH STATE STREET
ANN ARBOR, MICHIGAN

33 111
UGL

We have not as yet received the title indicated. Please report by checking the appropriate box below. If the title has already been sent, please do not duplicate shipment.

- ☐ Shipped on _____
- ☐ Not yet published. Due _____
- ☐ Out of print. Cancelling
- ☐ Out of print. Searching
- ☐ Out of stock. Will send _____ (Please give approximate date if possible)
- ☐ Sold. Cancelling
- ☐ Other: _____

Figure 7. Claim notice

The International Bookseller Looks at Acquisitions

DOMINICK COPPOLA
Stechert-Hafner, Inc.
New York, N. Y.

SOME TEN YEARS AGO, in an address to a library group, I quoted Robert Vosper to the effect that library literature in the area of acquisitions was thin or non-existent. I remember saying, too, that communication between booksellers and librarians was also fairly uncommon and left much to be desired. Today bookseller-librarian communications and the literature of acquisitions both present an appreciably different picture, one that is certainly encouraging.

Discussion groups and other program activities which include representatives of the book trade in its different aspects are now found fairly often at library meetings, national and regional. And these days, one has access to a substantial number of monographs and articles in the professional library journals dealing with the problems and techniques, if not with the philosophy, of acquisitions of books and periodicals, domestic and foreign, current and retrospective, and of related materials. However, in a rapidly changing world, there is still much that can be done to enable acquisitions librarians to cope more efficiently with the new and challenging situations that continually arise.

Acquisitions librarians faced with the rapid expansion of collections, or with the task of building up collections where none previously existed, often in subject or geographical areas with which the libraries were heretofore not particularly concerned, must necessarily keep abreast of the latest developments in acquisitions work in all its phases. They need to supplement their basic training and past experience, expand their activities, broaden their vision, adopt radical acquisitions techniques when necessary, and be ready to change points of view that are no longer tenable. The librarian who wishes to keep up with as many developments as possible in acquisitions will want to find out about, and keep posted on, the variety of services which booksellers can offer him.

Since I am a representative of the book trade and in particular of a firm which might be characterized as an importer and general dealer, or simply as international booksellers, I shall restrict my comments accordingly. Examination of such a firm, for example, will reveal that its services to librarians are manifold and that one can turn to it for domestic and foreign books in print and out of print, for current publications difficult to locate, for periodical subscriptions and other serials services. Librarians may discover too, if they are not already

aware of it, that booksellers often possess a wealth of bibliographical information which is highly valuable and sometimes unique.

International booksellers naturally can amass a vast amount of information about publishing in many world areas. As an illustration, they may have a tremendous amount of bibliographical information about the proceedings, transactions, symposia, etc., of international congresses and other meetings sponsored by international organizations. Such data, which is carefully pooled, comes their way because of the great variety of requests received from many libraries throughout the world.

The extent of the bibliographical resources which an international bookseller and general dealer must of necessity have at his command for use in his operations should be of special interest to the small and medium-sized library. One cannot expect to find the large and expensive bibliographical reference tools, especially the foreign ones, in such libraries; and there is no reason why any library should not take advantage of the bibliographical services that booksellers can render.

In obtaining foreign materials, either on a global basis with comprehensive coverage, or on a selective basis, the acquisitions librarian will want to acquaint himself with the various services of dealers abroad as well as with those of importing firms in this country. He may discover that purchasing directly from abroad may sometimes be to his advantage, or that at other times the domestic importer may be the answer to his particular problem. By availing himself of the latter's services, he may secure publications, whether they be monographs, serials sets or sets of reference works, current or retrospective, often directly from stocks maintained in this country. For such titles that are not on hand locally, he can rely on the importer to obtain them from abroad, thus eliminating some complicated procedures entailed when dealing directly with foreign countries. Correspondence, invoices, adjustments are as a rule so much more easily handled when they emanate from a source right within one's own country. Whether, however, such advantages outweigh those which foreign firms might offer, is up to the individual librarian to decide.

Sometimes when the librarian makes the effort of keeping informed about a bookseller's activities, some startling and successful results may very well follow, not only to the surprise of the librarian but to that of the bookseller as well. A case in point is the breakthrough achieved in the field of Latin American acquisitions during recent years.

Towards the end of the fifties, there were a number of informed and imaginative librarians interested in Latin American acquisitions who realized that the floodgates holding back the book production of Latin America could only be opened up through the combined efforts of both the library world and the book trade. The discussions, the investigation, and the planning, under the auspices of the Seminars on the Acquisition of Latin American Library Materials, took a number of years, eventually resulting in the cooperative effort known as the Latin American Cooperative Acquisitions Program (LACAP) created in 1960.

Since most of the facts are recorded in the literature, I shall not go into detail about the project. I do wish to point out, however, that, in these days when so much is being said about cooperation among libraries, this is one of the outstanding examples where cooperation actually took place, and with successful results. Cooperation in this instance was achieved not only among the libraries themselves but also with the book trade. The execution of the plan was entrusted to the firm of Stechert-Hafner, which had been engaged in the Latin American field for many years, and that organization assumed complete financial responsibility for the project.

As a result, books by Latin American authors in every subject field have for the last few years been arriving in numbers heretofore unequalled. Services of supply were established, which through continuous work in the field, have proved highly successful and which continue to improve as time goes by. Thanks to the initial cooperation of leading libraries such as that of the Pan American Union, the Library of Congress, the New York Public Library, the University of Texas, and some thirty other libraries throughout the country, which joined the cooperative project as time went on, the Latin American acquisitions picture is brighter now than ever before.

May I recommend for your consideration, in the event that you have not yet run across it, the wealth of acquisitions literature that is available in the reports and working papers of the Seminars, the eleventh meeting of which was concluded at Columbia University in July, 1966. If, for instance, you wish to see what a librarian or a bookseller is up against while actually working in the field in Latin America, read the graphic and realistic reports of Dr. Nettie Lee Benson, Librarian, Latin American Collection, University of Texas, who did most of the spadework during the first several years of the project.

The future will undoubtedly see more and more activity based on the exchange of ideas between libraries and booksellers. Certain aspects of Title IIC of the national Higher Education Act, for example, will call for a high degree of cooperation from the book trade if the far-reaching goals are to be achieved.

There are, in the meantime, other instances of cooperation between libraries and the book trade which have also brought good results. For instance, blanket order arrangements are now available which may solve some acquisitions problems in small, medium-sized, or large research libraries. There are blanket order services for the purchase of selected foreign fiction, of selected titles in various subject fields of domestic and foreign publications, and comprehensive blanket order service for books from many different world areas.

Because of changing acquisitions techniques, the economics of acquisitions is also changing. For example, the adoption of blanket order arrangements might be a partial answer to the current shortage of qualified personnel. A library interested in fairly complete coverage might find it advantageous to purchase the publications from an area like Latin

America, for instance, on a comprehensive basis instead of assigning a person in acquisitions to check bibliographies, announcements, etc., and to select therefrom. As a result it would receive practically all of the material that it would ordinarily have selected. A few receipts might be superfluous, but this should be a negligible consideration.

There are two important advantages in this kind of arrangement. First, it saves much of the valuable time of acquisitions people in selection, ordering, and correspondence. Second, it guarantees receipt of the material, some of which, as in the case of Latin American publications, might very well have become unavailable by the time orders for selected titles were placed abroad.

Of course, in areas where there is a lack of bibliographical control, the blanket order approach is indispensable for libraries which are seeking to build their collections in depth. Even where current bibliography is satisfactory, blanket order arrangements can be of distinct advantage for libraries lacking adequate acquisitions personnel. Appreciable library staff time can be saved; the faculty too might welcome a release from the work of selection which is often its responsibility. The trend on the part of librarians toward a more realistic approach to the changing economics of acquisitions is clearly discernible and will undoubtedly become more pronounced as time goes on.

In conclusion may I emphasize that it is up to librarians now more than ever before to learn as much as possible about the book trade, to keep abreast of developments, and to use to the fullest extent the facilities which it has to offer. It falls to the well-informed and dynamic librarians to challenge the imagination of booksellers and to encourage them to enter new fields and devise better and different ways in which they can be of service to the library community.

SURVEY OF DATA PROCESSING EQUIPMENT

A report of a survey of data processing equipment made by Creative Research Services, Inc., has been printed and is being sold by the Library Technology Program. The report includes detailed tables showing libraries using electronic accounting machine equipment and automated data processing equipment, analyzed by function and type of equipment employed.

The survey was made for the Documentation Division of Special Libraries Association and the Library Technology Program, primarily for their own use, as a first step toward identifying library functions which are automated and places in which they are operational. Because copies of the survey were desired by others, LTP printed 200 copies which it is selling at a price sufficient to defray printing and related costs. Orders for the 160-page survey, entitled *The Use of Data Processing Equipment by Libraries and Information Centers*, should be sent to the Library Technology Program. Payment, in the amount of $10.00 a copy, should be made payable to the American Library Association, 50 E. Huron St., Chicago, Ill. 60611. Payment in advance will be appreciated.

The Antiquarian Reprint Dealer Looks at Acquisitions

FREDERICK ALTMAN
Kraus Periodicals, Inc.
New York, N. Y.

MY ACTIVITIES SPREAD OVER TWO FIELDS, the antiquarian and the reprint. So this will be a double talk, hopefully without any double-talk. The antiquarian field will be my first topic, the reprint field the second, this sequence being justified by the fact that, at least in many antiquarian-reprint firms, the antiquarian experience most often inspires and leads to reprint decisions. In the interest of brevity, I will insert a *leitmotif* rather than speak only in generalities. As an antiquarian book and periodicals dealer, speaking on this topic, my *leitmotif* is that first and foremost acquisitions should and must look *at* and, most importantly, *to* the book trade.

As you know, many, if not most, antiquarian firms, both large and small, have grown and sometimes shrunk or died with one man. This makes our trade a highly individualistic one; and whatever I am saying to you now should be considered as very subjective remarks, for in spite of the sizes of our organizations, they do have very definite personalities and these personalities cannot help but be reflected in our remarks.

The education explosion, seen and felt by all of us by the creation of the new universities in the United States; the expanding programs of virtually all U.S. libraries; the expanding area studies programs in the established colleges and universities; the expansion of junior, state and teacher colleges into four-year and very often into graduate institutions; plus similar happenings in Germany—now with six or eight new universities—in Canada, in Japan, in Australia, in the new nations, and even in France, have created a most difficult market situation for you in acquisitions. You find yourselves more and more often competing with each other for books and journals. It is natural that in such a situation prices rise. However, in my own experience I have not yet found an alarming price situation in the antiquarian world market. What I find as a responsible dealer is that my imagination and my staff's imagination in locating and buying material is taxed much more heavily today than formerly, and we all are forced to rely on different resources within ourselves and within our organizations to find as much of the material as possible and to find it at the right price. Again, subjectively—and candidly—speaking, virtually during all the years of my management, *we* have had preferred accounts—that is, libraries, both large and small—where our imagination became stimulated by the li-

brary and the librarian, where we knew and were kept abreast of existing and future programs, where we were in a position to suggest continuously to them materials which we knew they wanted, the moment the items appeared on the world market. This practice induced us also to issue fewer catalogues than in the past. For example, let me tell you that even though our inventories in medicine are very large, the last medical catalogue which we published was issued, I believe, five or six years ago. Why? Because we know of five, six, maybe ten libraries in the world who are either building medical collections from scratch or are greatly expanding their holdings. We already know what they want. If we were to publish a catalogue, not only would there be direct competition among these libraries, even with our large stock which often contains half a dozen or more sets of a single title, but such competition would create higher prices for the same set in the next catalogue. A higher price in a catalogue would induce those sources from which we buy to raise their prices, thereby creating a vicious circle.

Or take another example: I recently had quite a fabulous collection on the Belgian Congo, the library of a former provincial governor of the Congo. This was not an item with a definite market price. I knew three places where the interest was very great for just such a collection, but I offered it only to one and did not put it up for competition. Why? Because the library which was offered and which purchased the collection had been looking to the book trade. You must today—and please believe me, there is not the slightest trace of arrogance in my statement —you must today try to establish a close relation with the dealer. You must stimulate him and fertilize his thinking. You must be a psychologist; and then the big dealer or the small, the specialist, or the firm like ours which deals with law through mathematics, medicine through literary criticism, with the whole range of human experience, all these dealers will not only give you the benefit of their experience and expertise, but they will feel flattered and honored. They will become not only money-makers (which I do not disparage, believe me) but they will also be given a mission in society. You must (and do) inspire them; you must con them (and some acquisitions librarians are among the best con-artists I've met) into working for you. Try this method with our firm or the many other highly ethical dealers and well-reputed firms in this field. As a by-product, you might even solve some of your staffing problems!

We are all aware of the fact that the growth of the reprint industry has taken some pressure off the antiquarian field. The larger firms, at least the largest firms in this field, have started and developed their reprinting firms from experiences gathered in the antiquarian market. If you, as an antiquarian dealer, had in stock one set of the *Rolls Series* and had ten virtually desperate requests for it; and if you had seen that over a period of years the price of such a set went from $1,800 to close to $10,000, it would be natural for you to try to sign a

contract with the original publishers to bring out a reprint, the price of which is often half the going market price for an antiquarian set. Moreover, the paper condition of the reprint would be (and is) perfect, and for years, at least with us and I understand with many other reprinters, a paper is used where the pH factor and the bursting strength virtually guarantee a minimum life of 100 years for these volumes. I must insert here it was the delightful intervention of Dr. McCarthy, then Executive Secretary of ARL, who urged us on in this direction and to whom both you and I are very grateful.

Reprinting throughout the world is picking up more and more momentum, so much so that I believe it has become almost an additional problem for you in acquisitions. No matter how big your budget is, you are probably forced into selective buying in the reprint field as in other fields. Those antiquarian titles that you had forgotten about or pushed to the very back of your minds because you knew that they had not been on the market for years, are suddenly again items which you have to include in your budgets. Let us assume that you were to build today a source collection on medievalism. Ten years ago, a *Monumenta Germaniae Historica,* a *Rolls Series,* a *Revue historique,* and similar monumental collections, could not be found, or rarely found, on the antiquarian market. Today, I believe that 80% of the items in Paetow's *Guide to the Study of Medieval History* exist either in reprint or have been announced as reprints.

Again I would say that, as in the antiquarian field, you simply must also look at and to the reprinters. Many of us in the reprinting field are fully aware of our own faults, and are often critical of the faults of others in the industry. Reprints are announced too hopefully, too optimistically, and sometimes budgets are encumbered for items which were either never printed or printed with great delays. Sometimes I have seen announcements of reprints where, in my experience, sufficient originals in very sound condition still exist on the international market, virtually at half the price. Two examples come to mind, without pointing a finger at anybody. One is the Imperial Russian encyclopedia, the *Brockhaus-Efron,* where we alone, I think, have ten sets in stock. The other example is the famous *Michaud,* where on every trip to Europe I still can buy four, five, or six copies at considerably less than the reprint price. I certainly do not wish to propagandize for our companies but, believe me, I have put my heart and soul for twenty-one years now into this business; and I do hope that we are not guilty of practices of this sort. I also hope that your confidence has not been shaken by these statements. I used them only to impress upon you again that in both fields, the antiquarian and the reprint, you should make as much personal contact as possible with the men and women behind the signatures of the companies, and visit their warehouses and stock rooms so that you can decide whether they are working from their own stocks or not.

I had this week a visit from a librarian friend whom I have known for some seventeen to eighteen years. He brought with him a recent

find of his who, hopefully, will be his future acquisitions librarian. By the way, he is not a professional librarian but a former military man. The past Sunday the two of them were with me the whole day to be exposed to Altman. That future acquisitions librarian will know how to get the most out of our firm. He will know what we can do and he will have a pretty good idea that, if there is the slightest suspicion on our part that we will fall down on a job, we will tell him so. He knows how he can instill in us the desire to work for him and has already a pretty good idea of our stock.

These are probably the most important points. It is not easy to cram twenty-one years into a few pages. As a matter of fact, a good friend of mine in the library field just said in a note, "How can one discuss 'The Book Trade Looks at Acquisitions' in less than one full-day cram session?"

STATEMENT FROM CCS CLASSIFICATION COMMITTEE

The purpose of the Institute on the Use of the Library of Congress Classification held in New York, July 7-9, 1966 was *not* to indicate endorsement of a particular classification system, but to identify problems in its use.

There is evidence that some librarians did not make a thorough investigation of all of the difficulties that are involved before adopting the LC Classification. Sponsors of the Institute were also aware of the fact that a most careful study of all available literature would not clarify many of the questions that arise when one works with the schedules outside of the Library of Congress. The volume of inquiries received by ALA committees, LC staff, and libraries experienced in using the Classification influenced the decision to sponsor an institute that would provide an opportunity for a large number of persons to have common questions answered simultaneously.

An attempt was made to limit participants in the Institute to those who had "a basic knowledge of the LC Classification." However, a survey of the questions submitted in advance revealed that the LC staff would have to restrict discussion to general explanations of questions asked most frequently. The proceedings of the Institute will include answers that could not be given during the sessions. A list of libraries known to be using the Classification and a bibliography of works pertaining to the system will also be included.

Small workshops that provide opportunities for individual expression are the "next step" after general discussions, and such events were convened by individuals in several institutions to discuss the Library of Congress Classification, the Dewey Decimal Classification, and perhaps others. The Classification Committee would like to act, where appropriate, as a clearinghouse in the areas of classification and reclassification and requests that information concerning such meetings held since July, 1966 or in the future be sent to its Chairman, Mrs. Annette L. Phinazee, Atlanta University, Atlanta, Ga. 30314.

Microreproduction Information Sources*

ALBERT DIAZ
Microcard Editions, Inc.
Washington, D. C.

AS WE RECEIVE A GREAT MANY INQUIRIES regarding microform reading equipment and with respect to what's available on microforms, I thought I would devote my time to sources of information in these two areas.

Perhaps the best source for information and evaluation of current equipment is *Library Technology Reports*, a subscription service offered by the Library Technology Program of ALA. This service, which costs $100.00 per year, provides libraries with periodic reports on practically anything they are likely to buy including microform reading machines. All machines are given an impartial examination so that the subscriber receives not only specifications about the machine but also a critical evaluation. All tests to date have been conducted by William Hawken, formerly head of Photographic Services at the University of California Library, Berkeley, and a recognized expect in the field of microreproduction. Mr. Hawken has also written *Enlarged Prints from Library Microforms (Library Technology Project Publication No. 6)*, a detailed study of reader-printers.

Another important source of equipment information is the *Guide to Reproduction Equipment*, edited by Hubbard Ballou, Head of the Photoduplication Laboratory at the Columbia University Libraries. The *Guide* is published by the National Microfilm Association under a grant from the Council on Library Resources and is now in its third edition (1965). It is probably the best reference source for specifications; it does not, however, give any evaluations. The current edition contains 550 pages and includes descriptions of 292 machines.

A third source, and one that is often overlooked, is magazines having to do with business systems and business equipment, many of which are distributed free of charge on a controlled-circulation basis. Some of these are *Administrative Management, Modern Office Procedures, Reproduction Methods*, and *Systems Management*. The March 1966 issue

* AUTHOR'S NOTE: Since this paper was delivered the following changes have taken place: (1) Microcard Editions, Inc., became a division of the Microcard Corporation, which in turn was acquired by the National Cash Register Co.; (2) University Microfilms is now University Microfilms Library Services and is part of the Xerox Education Division; (3) the International Documentation Centre is now Inter Documentation Company AG, located in Switzerland.

of *Systems Management,* for example, has a detailed comparative chart of microfilm readers and microfilm reader-printers (pp. 35-42).

Two final sources are *National Micro News,* the monthly publication of the National Microfilm Association, and the *Proceedings of the National Microfilm Association* in which are published papers given at the Association's annual conventions. It must be emphasized that microreproduction is a rapidly growing and rapidly changing field, and that therefore the latest information is obtained from manufacturers' circulars and through consultation with their representatives.

Scholarly microfilming began in the middle 1930's when researchers started using the then recently introduced Leica 35mm cameras for photographing unique materials in foreign archives. This was followed by the first commercial application in the late 1930's when University Microfilms, now a subsidiary of the Xerox Corporation, began filming current journals and out-of-print books. These two activities were followed by the establishment of microphotography laboratories in many libraries and by the use of microfilm by such specialized agencies as the National Archives.

The first attempt to list microfilms was the *Union List of Microfilms* initiated in the spring of 1941 by the Philadelphia Bibliographic Center and Union Library Catalogue. The list was published in 1942 with *Supplements 1-5,* 1943-47, and was cumulated into the *Union List of Microfilms, Revised, Enlarged and Cumulative Edition, 1951,* followed by *Supplements 1949-52* and *1952-55.* There was then a final *Cumulation,* 1949-59, published by Edwards Brothers in 1961, which includes more than 52,000 entries representing microfilm accessions reported by 215 libraries in the United States and Canada from July 1, 1949, through July 31, 1959. It excludes newspapers, dissertations, and a number of specialized series such as the *Vatican Manuscript Codices.* In 1948, another important reference source appeared, *Newspapers on Microfilm,* a listing which has gone through several editions and is now published by the Library of Congress.

Both the *Union List of Microfilms* and *Newspapers on Microfilm* limited themselves to materials reproduced on roll microfilm. The first listing of publications on unitized, opaque microforms (e.g. Microcard, Microprint) was the *Union List of Publications in Opaque Microform,* compiled by Eva Maude Tilton and published by Scarecrow Press in 1959. There is a 1961 supplement and a 1965 revised edition. These are essentially listings, in dictionary order, of entries appearing in publishers' catalogs.

In 1961, Microcard Editions, Inc. issued the first list of microform publications to include all methods of microreproduction. It is called *Guide to Microforms in Print* and appears in February of each year. Basically, it is a comprehensive list, in alphabetic order, of materials which are available on microfilm and other microforms from United States publishers, exclusive of theses and dissertations. It is not a union list but rather a list of publications offered for sale on a regular basis.

For each entry the price is given, the publisher, and the method of microreproduction used. In the 1966 edition there were some 14,000 entries. A companion volume, *Subject Guide to Microforms in Print,* lists the same entries under broad subject classifications.

There are currently some 60 firms or organizations offering microform publications for sale to the general public. Of these, five may be considered major commercial publishers and two, major non-commercial publishers. The commercial firms are Lost Cause Press, Louisville, Kentucky; Microcard Editions, Inc., Washington, D. C.; Micro Photo, Cleveland, a division of Bell & Howell; Readex Microprint Corporation, New York; and University Microfilms, Ann Arbor, Michigan, a subsidiary of the Xerox Corporation. All issue catalogs. The non-commercial ones are the Photoduplication Service of the Library of Congress and the Photographic Service of the New York Public Library. Two major overseas microform publishers are Micro Methods, Ltd. in England and the International Documentation Centre in Sweden.

There have been over the years many specialized lists of microform publications of which prime examples are the *List of National Archives Microfilm Publications* (National Archives) and the *Guide to Photocopied Historical Manuscripts,* edited by Richard W. Hale, Jr. and published in 1961 by Cornell University Press. Such lists are essential in running down the availability in microform of a given item or body of material, as many entries in these lists will not appear elsewhere.

The latest information source with respect to availability is the *National Register of Microform Masters,* compiled by the Library of Congress with the cooperation of the American Library Association and the Association of Research Libraries. The *Register* is being published in order to avoid duplication of costly master negatives and to make known which library materials have been transferred to microforms under the preservation programs of American research libraries. The *Register* includes foreign and domestic books, pamphlets, serials, newspapers, and foreign doctoral dissertations. It does not include technical reports, typescript translations, foreign or domestic archival manuscript collections, or U.S. doctoral dissertations or master's theses. Materials are listed by Library of Congress catalog card numbers or by National Union Catalog card numbers, followed by the author's name and a brief title. If neither of these numbers has been assigned to a work, it is entered by main entry.

The *National Register of Microform Masters* should fill an important need as it provides a central listing for the type of microform that has been most difficult to keep track of—that made by a library for its own use. Since the library may have little or no interest in selling duplicate copies, no publicity is given and therefore the existence of the microform does not become widely known, leading to the type of situation wherein one year after Library A has completed filming a lengthy set, Library B begins filming the same set because it does not know of Library A's activity. Between the terminal date for the *Union*

List of Microfilms and the beginning of the *National Register of Microform Masters,* the only coverage given such activities has been the *Microfilm Clearinghouse Bulletin,* published as an appendix to the *Library of Congress Information Bulletin.*

In summary:

(1) All libraries having a serious interest in microreproduction should consider subscribing to *Library Technology Reports* as this is the sole source for evaluations based on impartial tests.

(2) The best complete source for equipment specifications is the *Guide to Microreproducton Equipment,* but as this is a rapidly changeing field the latest information can only be obtained through manufacturers' circulars and by consulting with manufacturers' representatives.

(3) Microforms sold on a regular basis (i.e., listed, promoted, and sold) are found in the *Guide to Microforms in Print,* an annual publication listing works of both commercial and noncommercial publishers.

(4) Microforms created by libraries for internal use or preservation purposed are the most difficult to keep track of. Through the 1950's the basic source is the *Union List of Microfilms* and its various supplements, and beginning in 1965 the basic source is the *National Register of Microform Masters*—between these two periods reference must be made to the *Microfilm Clearinghouse Bulletin.*

(5) Microform publishing, however, has grown tremendously in the last five years so that conventional lists and bibliographies are not enough to give full coverage. Since the technical reports of the Atomic Energy Commission and the National Aeronautics and Space Administration are all available on microfiche, for example, one has to consider *Nuclear Science Abstracts* and *Scientific and Technical Reports* as being sources of information with respect to what is available on microforms—the same could be said for other specialized listings such as *Dissertation Abstracts* (University Microfilms), which for many years has listed doctoral dissertations available on microfilm or in enlarged copy made from microfilm.

(6) It seems fairly evident that the use of microforms will continue to increase at a rapid rate so that the ultimate solution to bibliographic and equipment problems will probably be the establishment within libraries of microform departments or rooms, a step that has already been undertaken at several institutions.

The Automatic Ordering of Replacement Titles for Libraries in Metropolitan Toronto

EVELYN THOMPSON
Toronto Public Library, Toronto, Ontario
and
GEORGE FORRESTER
Consultant, J. Kates & Associates

THE TORONTO PUBLIC LIBRARY BOARD has developed a new plan in order to reduce the costly, time-consuming, repetitive work expended by book selection and processing personnel in providing replacement titles for the branch libraries of the Toronto Public Library System.

To determine the feasibility of using a computer for the automatic ordering of a limited number of titles, paperback books were chosen as the medium for an experimental study. This choice was influenced by the increasing importance of this form of publication, the variety of titles obtainable from one wholesale distributor, and the punched card service provided by the R. R. Bowker Company of New York. These punched cards contain in coded form the information printed in the regular edition of *Paperbound Books in Print*, and, after some reconciliation of entry, are ready for input into the computer file. More than 30,000 punched cards were supplied by Bowker in the fall of 1964; the annual subscription price also included an updating service for both additions and deletions in the file.

The firm of J. Kates & Associates, a division of KCS Limited, Toronto, was engaged to investigate the process and develop a system which would supply to the eighteen adult branch libraries paperback replacement titles, in editions suitable for library use, in quantities prescribed by budget limitations, and distributed on a percentage basis within twelve broad classification categories. A high degree of flexibility in the programme was essential so that changes could be incorporated as experience with paperbacks and the system accumulated; also allowances had to be provided for possible expansion to include other branches or other public library systems; and finally it was necessary to attempt to anticipate future developments in the control of other types of books and library material.

A systems consultant from J. Kates & Associates made a preliminary analysis of current administrative procedures used in the ordering of replacement titles which disclosed a complicated routine that included: (1) an annual decision on the monthly order cycle in which selected subject areas should be examined; (2) the request for submission from

all branches of desirable titles in these fields; (3) the searching to determine availability of these titles in suitable editions; (4) the compilation of a list of these titles within a quota dependent on the allocation of budget funds; (5) the circulation to branches of the edited list for individual selection and quantity of wanted titles; (6) the coordination of the marked branch lists; and, finally, (7) the placement of orders with the appropriate distributor or agent. In short, decisions on replacements were made individually by title, edition, quantity, and current need.

In designing the computer system, the logic of selecting paperbacks was based on the following criteria:

—there is a body of paperback titles which can fulfil a definite purpose in augmenting the resources of a branch library.

—within the body of desirable titles it is, with some exceptions, irrelevant which are purchased first.

—there are certain publishers' editions which are generally more suitable for library usage than others.

—the number of copies of each title that a branch library could profitably absorb can be predetermined.

The "body" of paperback titles was assembled by librarians qualified in the various subject areas. From a computer printout of Bowker's 30,000 titles arranged in subject order, they selected those titles which are basic to all library collections and which are in constant or frequent demand, thus requiring replacement at recurring intervals. The total number of titles was kept initially under 2,000.

To enable the computer to choose automatically an edition suitable for library use it was necessary to rate all publishers' editions according to their capability of withstanding the wear and tear of many circulations. This rating can be changed at any time as experience with a variety of paperback editions is gained. Also, exceptions to the prescribed rating can be integrated into the system so that the computer choice will be displaced for certain specific titles.

The replacement cycle is dependent on the quality rating of publishers' editions, the number of titles in the scheme, and the amount of money allocated from the total book budget. Contingent on these variables, titles available in editions rated as excellent will be eligible for reordering in a 24-month cycle, those available only in editions rated as good in 16 months, and titles available only in editions considered fair will come up for replacement every 8 months. As the computer is programmed to select the edition which has the highest rating, editions which are good or fair are chosen only when there is not a superior one.

The number of copies to be purchased for each library is based on branch size and circulation statistics. As paperbacks are more expendable than hard cover books, an exhaustive survey as to expected use in each outlet was not believed necessary. It was decided to place three copies of each title in the three largest branch libraries, two copies in

the three next largest branch libraries, and one copy in each of the remaining twelve libraries. (In January, 1966, the number was reduced to one copy per branch, a very simple adjustment for the computer to handle.)

A percentage of the titles ordered each month is assigned to twelve broad subject fields, based on a combination of availability and anticipated demand. These figures can also be amended as conditions change. Emergency procedures exist whereby titles in immediate demand may be given priority and included in the order currently being processed.

At this point, decisions had been made on which titles should be included in the project, how the titles were to be distributed among subject categories, which publishers' editions were rated most suitable, how the replacement cycle would function, and what number of copies were to be ordered each month. All these decisions were stored in the computer file and were ready to be used in the production of the first order planned for April, 1965.

Prior to the placement of the first order under this organized scheme, and before the decisions had been completely finalized, an invitation was extended to other public libraries in the Metropolitan Toronto area to review the project and indicate whether, in its present form or with some slight modification, they would be interested in participating in a joint operation on a cost-sharing basis. Time limitations did not permit any major amendments to the programme before the April deadline, but the libraries were assured that provision would be made for a complete review of the operation after a six month's trial period. It is a matter of considerable pride that when the first paperback order was produced, by computer, in April 1965, it was a combined order for five Metropolitan Toronto public library systems—East York, Etobicoke, North York, Scarborough, and Toronto. A Joint Operating Committee, consisting of a representative from each participating library, was charged with the responsibility of deciding on any changes which should be incorporated into the scheme.

It was assumed that the proposed system would be most effective if it included centralized ordering, receiving, distribution, bookkeeping, and invoicing. The Toronto Public Library agreed to undertake the co-ordinated operation for the balance of 1965 and on into 1966, if necessary. Cooperative cataloguing was also discussed, and North York and East York contracted for complete processing, identical with that used in the Toronto Public Library system. Individual difference in the practices of the other libraries precluded the initiation of complete centralized cataloguing.

Monthly invoices submitted to the participating libraries include computer operation cost (maintaining and updating the title file, selecting and placing the purchase orders), cost of centralized receiving and distribution, bookkeeping and invoicing, and, in the case of North York and East York, processing charges. However, many of these costs are offset by the higher discount rate offered by distributors for bulk orders.

For a book with a list price of $1.00 U.S., the final cost varies from 95¢ to $1.05 Canadian.

The need to expand the programme to include Canadian and British titles other than those on the Bowker list was recognised from the beginning, but as the systems for selection are entirely different, their consideration was postponed until the original scheme was in operation. There is no publication in the Canadian field comparable to Bowker's *Paperbound Books in Print*, but as the total number of paperback titles published in Canada is not very high, it was not difficult to compile an initial list of some 240 suitable titles by checking Canadian publishers' catalogues and other printed sources. Author, title, edition, price, and classification number for each title were supplied to the computing firm for key punching of cards, coded for compatibility with the Bowker cards. A Toronto wholesale supplier was selected to handle the orders, and the first order was produced by computer in June.

British titles were selected from catalogues, lists, and *Paperbacks in Print* (J. Whitaker & Sons, Ltd., London), using the same criteria established for American and Canadian titles. Punched cards were produced and integrated into the computer file, which now included possibly 35,000 items, of which 2,500 were designated as the basic list.

Up to the end of 1965 the computer selected each month 135 titles: 110 from the Bowker list, 15 from the Canadian titles, and 10 from the British files. The Canadian and British titles were not selected within specified subject categories but chosen in alphabetical order, with the built-in provision that no more than two titles by the same author should be ordered in one month.

From the first six orders, April through September of 1965, 633 titles were received from the American and Canadian distributors, with an overall total of 24,687 copies. Based on these figures more than 50,000 volumes could be expected to arrive during 1966. Because this intake was considered too large by a majority of the participating libraries, it was agreed at a meeting in December that the number of titles selected each month should be reduced by 25%.

The first six month's trial period underlined the necessity for continuous feedback from persons in the branch libraries who had actual knowledge concerning the use and durability of the paperbacks in order to advise the committee on titles to be added to or deleted from the computer file. The branch librarians also reported when in their opinion, a publisher's edition was found to be at variance with the original rating.

The project was to be continued through 1966, with no major modifications anticipated, and at the end of the year a comprehensive appraisal would be undertaken by all participating libraries.

From the beginning it was the intention of the Toronto Public Library Board to extend computer ordering to other types of books, provided the method originated by the paperback replacement pro-

gramme achieved reasonable success. In the summer of 1965 a preliminary investigation was started to determine the effectiveness of applying data processing techniques to the whole process of ordering, receiving, cataloguing, and distributing Boys and Girls' and Young People's replacement books. The investigation was also to determine if the paperback system could be adapted to this new project.

It was found that a number of books in these collections were reordered in large quantities at regular intervals and could be handled economically by a computer. However, the programme already designed and in use could not be applied to the new project because of differences in basic characteristics between adult paperbacks and children's books. Some of the differences are:

—replacement titles in the Boys and Girls' collection remain relatively constant from year to year.
—unit price of Boys and Girls' books is much higher, making consequences of error more significant.
—different editions of the same title are not automatically interchangeable.
—life span of hard cover books is much longer.
—branch needs for individual titles vary.

The theory underlying the Boys and Girls' computer ordering policy is that there is a known volume of titles which should be available in every branch library in quantities above specified minimum requirements. The frequency of reordering necessary to maintain this standard can be ascertained from a pattern of ordering employed over the years. The ordering cycle which is now being defined will assume the following form, or some modification of it:

Titles in Category A—ordered in bulk quantity for each branch each year; up to 6 copies for large branches; up to 4 copies for small branches.
Titles in Category B_1—one copy for each branch ordered each year.
Titles in Category B_2—one copy for each branch ordered every 2 years; one-half ordered in each calendar year.
Titles in Category B_3—one copy for each branch ordered every 3 years; one-third ordered in each calendar year.
Titles in Category C_5—one copy for each branch ordered every 5 years; one-fifth ordered in each calendar year.

The total number of titles to be handled by computer will be slightly in excess of 2,000, will provide 16,000 books a year, and will require an annual replacement budget of $40,000.

A catalogue was published in 1966 listing both the titles under computer control and an additional 1300 titles not included in the tape. The catalogue is divided into two sections: (1) Author, and (2) Subject. Full entry is given under author and the following details are provided: Author, Title, Computer Category, the re-order cycle, and Boys and Girls' Classification Symbol.

One of the aims of the project is to produce an even flow of books through the technical services of the library system. To achieve this, a series of orders specifying due dates over a three-month period are issued to the publishers, with the stipulation that no partial shipment of any title will be accepted. The scheduling of the delivery of books from all the publishers involved, in conjunction with the advance information that the publishers will have of future requirements to meet due dates specified, are expected to contribute to a more orderly flow of replacement books through the processing department and into the branch libraries. This phase has been in operation since September, 1965, with successful results.

A category D, which consists of the 1,300 titles mentioned above, has been provided to list those books which, partly owing to budget limitations but also because of wide variations in their demand and use in the 24 branch libraries, are not yet replaced in any standardized pattern. New titles will be added to this group, and those titles which develop a constant demand will be assigned to the appropriate category within the computer plan.

One category of titles presents problems that have not yet been resolved. Titles in this category are purchased for Young People as well as for Boys and Girls. Approaches to handle duplication of this material have been developed tentatively and are now being investigated, but an economical, practical solution has not yet been formulated.

We believe that these projects may well stimulate new thinking on other library problems. Both the paperback and Boys and Girls' Replacement Projects have compelled a majority of the Toronto Public Library staff to look critically at the practices and routines which have been in use for many years, and to assess current techniques in the light of present conditions and future developments. The understanding of these library problems has certainly been intensified; and although these two small mechanization schemes do not claim to solve major conflicts, the accumulated experience is ready to be channeled into areas of broader significance.

SCHOLARSHIPS AVAILABLE

The University of Kentucky is pleased to announce that two additional Work-Study Scholarships are now being offered to provide an opportunity for well-qualified students to enroll in the Department of Library Science and, at the same time, acquire intensive work experience in the University Library.

This scholarship is offered on a cooperative basis by the University Library and the Department of Library Science. A stipend of $3,000 is paid for a ten month period. Students work 20 hours per week and register for nine hours of course work. This is a two-year scholarship, which means that the persons selected could continue for a second year at the same stipend. Interested applicants should request forms from the Chairman of the Department of Library Science, University of Kentucky, Lexington, Kentucky. Applications must be postmarked not later than July 15, 1967.

The National and International Standardization of Book and Periodical Publishing Statistics

FRANK L. SCHICK, *Director*
School of Library and Information Science
University of Wisconsin—Milwaukee
formerly *Coordinator, Adult Education and Library Statistics, NCES, U.S.O.E.*

SINCE 1817, STATISTICS OF NATIONAL SIGNIFICANCE appear annually in the *Statistical Abstract of the United States,* a publication of the Bureau of the Census. In its preface of 1965, the statement is made that it "is the standard summary of statistics on the social, political, and economic organization of the United States. It is designed to serve as a convenient volume for statistical reference and as a guide to other statistical publications and sources."[1] In the index, serials are not included, periodicals are lumped with newspapers, and books appear separately. There are 11 entries under "newspapers and periodicals." From the viewpoint of employment, payrolls, and manufacture, the data are complete; from the point of subject coverage, no information is given. Except for average costs of subscriptions among comparative international statistics on communications, only the number and circulation and manufacture of newspaper copies per 1,000 population is provided.

The reason for this lack of general information on periodicals is due to the newness of relevant international statistics standards and the absence of a U. S. statistics standard for periodicals and newspapers. This situation is now being changed, and it is hoped that it effects will make its impact on U. S. and U. N. and UNESCO statistical compilations and publications.

The Development of an International Publishing Statistics Standard

During the 1950's, in the U. S. and in other countries concerned with statistics, the plan was accepted that data collections must be based on commonly-accepted terms, concepts, and definitions. The staff of UNESCO, on invitation of international organizations such as IFLA, took the first steps towards standardization of statistics in the publishing field when it convened a committee of experts in April, 1961. This Committee drew up definitions which would be proposed by UNESCO to its member countries for adoption as a formal "Recommendation."

Standard definitions were compiled for books, pamphlets, other nonperiodical publications, newspapers, and periodicals. Between April 1961

[1] U. S. Bureau of the Census. *Statistical Abstract of the United States: 1965.* Washington, D. C., 1965, p. iii.

and 1964, member countries of UNESCO were invited to comment on the proposed standards. During the 1964 Conference of Government experts, Robert Frase of the American Book Publishers' Council assisted me in representing the U. S. at this meeting. On the recommendation of the various governments, considerable changes were made, and further refinements were added by the participants who had the function to bridge discrepencies, inconsistencies, and variant uses in many countries. In October, 1964, the UNESCO General Conference adopted the "Recommendation" as an international instrument; the U. S. was one of the signatories. The Recommendation is divided into four parts: an introduction, the book publishing section, the periodical publishing section, and the newspaper publishing section. The first part has been published and was discussed in various library publications, but the last two sections have not been reprinted or commented on before. They are presented here in full for the first time.

American Standardization Channels

The American Standards Association, Sectional Committee Z39, is responsible for standardization of matters relating to librarianship and documentation. Its Statistics Subcommittee is charged with the implementation of the relevant international library-related statistics standards in the U. S., the preparation and adoption of such standards for American use, and the initiation of necessary action for the ASA standardization procedures. The U. S., as other member countries of UNESCO, was asked to have the text of such standards published in full. The members of the Statistics Subcommittee of USA-SI/Z39[2] appreciate the assistance of *LRTS* and its editors in bringing this material to the attention of the segment of the U. S. public concerned with periodical and newspaper publications and statistics.

The use of these terms and definitions will permit the collection of meaningful statistical information among the UN member nations. The establishment of a U. S. statistical standard for books, periodicals, and newspapers will help us with the national collection of such data. It will assist the users of such information, publishers, editors, writers, and librarians to assess our contribution in this area and compare it with that of other countries. From such studies, assessment of our efforts can be expected, and an increase of national attention may be focused on periodical and newspaper publishing, one of the most essential means of information dissemination.

The Status of U. S. Publishing Statistics Standards

Early in 1966 the Subcommittee started to work on the draft of a standard, using as far as possible and practical the concepts, terms, and definitions of the UNESCO Recommendation as its starting point, aiming

[2] Members: George M. Bailey, Richard Darling, Eloise Ebert, Ruth Fine, Robert W. Frase, Herbert Goldhor, Paul Howard, Anne J. Richter, Jesse H. Shera, and Frank L. Schick, Chairman.

to make alterations only to the extent that they diverge from American practices, permitting, however, U. S. statistics to become part of the worldwide data collection of UNESCO.

In July, 1966, the Subcommittee agreed to draft separate standards for books, periodicals, and newspapers instead of a single standard because in the U. S. different agencies and organizations are responsible for the collection and dissemination of statistics. In the book area for example, the American Book Publishers Association, the Textbook Publishers Institute, the Census Bureau, the R. R. Bowker Company, and a Committee of the American Library Association collected and published different data, each of importance for the different aspects and agencies. The book publishing statistics standard will assure that the various data collections will have internal consistency and compatibility, and thereby become more significant to the users. In August a draft of this standard was prepared by the Subcommittee and mailed out for review. The comments are now being incorporated in a second draft which will become our first national publishing statistics standard. After its acceptance, work will begin on the standards for periodicals and newspapers.

The establishment of U. S. Statistics Standards for books, periodicals, and newspapers will assist us not only with the national collection of such data but help publishers, editors, writers, and librarians, the users of this information here and abroad, to assess our publishing activities and to compare them with that of other countries. From such studies and surveys an objective evaluation of our efforts can be made. As a result we can expect to receive a growing recognition for the U. S. contribution to contemporary civilization.

RECOMMENDATION CONCERNING THE INTERNATIONAL STANDARDIZATION OF STATISTICS RELATING TO BOOK PRODUCTION AND PERIODICALS

The General Conference of the United Nations Educational, Scientific and Cultural Organization, at its thirteenth session, held in Paris from 20 October to 20 November 1964.

Considering that under Article IV, paragraph 4, of the Constitution, the Organization may prepare and adopt instruments for the international regulation of questions falling within its competence,

Considering that Article VIII of the Constitution of Unesco provides that "each Member State shall report periodically to the Organization, in a manner to be determined by the General Conference, on its laws, regulations and statistics relating to educational, scientific and cultural life and institutions, and on the action taken upon the recommendations and conventions referred to in Article IV, paragraph 4,"

Convinced that it is highly desirable for the national authorities responsible for collecting and communicating statistics relating to book production and periodicals to be guided by certain standards in the matter of definitions, classifications and tabulations, in order to improve the international comparability of such statistics,

Having before it, as item 15.3.2 of the agenda of the session, proposals concerning the international standardization of statistics relating to book production and periodicals,

Having decided at its twelfth session that these proposals should be incorporated in an international instrument, to take the form of a recommendation to Member States,

Adopts this recommendation this nineteenth day of November 1964.

The General Conference recommends, with a view to the compilation of international statistics, that Member States apply the following provisions concerning definitions, classifications and tabulations of statistics relating to book production and periodicals, by adopting measures, in the form of a national law or otherwise, to give effect, within the territories under their jurisdiction, to the standards and principles formulated in this recommendation.

The General Conference recommends that Member States bring this recommendation to the attention of authorities and services responsible for collecting and communicating statistics relating to book production and periodicals.

The General Conference recommends that Member States forward to it, by the dates and in the form which it shall prescribe, reports concerning action taken by them upon this recommendation.

I. Scope and Definitions

1. The statistics referred to in this recommendation should cover printed periodical and non-periodical publications which are published in a particular country and made available to the public, and, in general, are publications which should be included in the national bibliographies of the various countries.
2. The following publications should be excluded from the statistics mentioned in this recommendation:
   a. *Publications issued for advertising purposes,* provided that the literary or scientific text is subsidiary and that the publications are distributed free of charge:
      (i) Trade catalogues, prospectuses and other types of commercial, industrial and tourist advertising;
      (ii) Publications describing activities or technical progress in some branch of industry or commerce and drawing attention to the products or services supplied by the publisher.
   b. *Publications belonging to the following categories, when they are considered to of a transitory character:*
      (i) Time-tables, price lists, telephone directories, etc.;
      (ii) Programmes of entertainments, exhibitions, fairs, etc.:
      (iii) Regulations and reports of business firms, company directives, circulars, etc.;
      (iv) Calendars, almanacs, etc.
   c. *Publications belonging to the following categories in which the text is not the most important part:*
      (i) Musical works (scores or music books), provided that the music is more important than the words;
      (ii) Maps and charts, with the exception of atlases; for example, astronomical charts, hydrographic, geographical and wall maps, road maps, geological surveys in map form and topographical plans.
3. In compiling the statistics referred to in this recommendation, the following definitions should be used:
   a. A publication is considered to be *non-periodical* if it is published at one time, or, at intervals, by volumes, the number of which is generally determined in advance;
   b. A publication is considered to be a *periodical* if it constitutes one issue in a continuous series under the same title, published at regular or irregular intervals, over an indefinite period, individual issues in the series being numbered consecutively or each issue being dated;
   c. The term *printed* includes reproduction by any method of mechanical impression, whatever it may be;
   d. A publication is considered to be *published in a particular country* if the publisher has his registered office in the country where the statistics are compiled, the place of printing or place of circulation here being irrelevant. When a publication is issued by one or more publishers who have registered offices in two or more countries, it is considered as having been published in the country or countries where it is issued;

e. A publication is considered as being *made available to the public* when it is obtainable either by purchase or by distribution free of charge. Publications intended for a restricted readership, such as certain government publications, those of learned societies, political or professional organizations, etc., are also considered as being available to the public.

II. Book Production Statistics

Scope

4. The book production statistics referred to in this recommendation should cover non-periodical publications corresponding to the characteristics and definitions given in paragraphs 1 and 3 above, with the exception of the publications listed in paragraph 2 above.
5. The following types of publication, *inter alia,* should be included in book production statistics:
   a. *Government publications,* i.e., publications issued by public administrations or their subsidiary bodies, except for those which are confidential or designed for internal distribution only;
   b. *School textbooks,* i.e., books prescribed for pupils receiving education at the first and second level as defined in the recommendation concerning the international standardization of educational statistics adopted by the General Conference on 3 December 1958;
   c. *University theses;*
   d. *Offprints,* i.e., reprints of a part of a book or a periodical already published, provided that they have a title and a separate pagination and that they constitute a distinct work;
   e. *Publications which form part of a series,* but which constitute separate bibliographical units;
   f. *Illustrated works:*
      (i) Collection of prints, reproductions of works of art, drawings, etc., when such collections form complete, paginated volumes and when the illustrations are accompanied by an explanatory text, however short, referring to these works or to the artists themselves;
      (ii) Albums, illustrated books and pamphlets written in the form of continuous narratives, with pictures illustrating certain episodes;
      (iii) Albums and picture books for children.

Definitions

6. The following definitions are without prejudice to existing international agreements and should be used for the particular purpose of drawing up the book production statistics referred to in this recommendation:
   a. A *book* is a non-periodical printed publication of at least 49 pages, exclusive of the cover pages, published in the country and made available to the public;
   b. A *pamphlet* is a non-periodical printed publication of at least 5 but not more than 48 pages, exclusive of the cover pages, published in a particular country and made available to the public;
   c. A *first edition* is the first publication of an original or translated manuscript;
   d. A *re-edition* is a publication distinguished from previous editions by change made in the contents (revised edition) or layout (new edition);
   e. A *reprint* is unchanged in contents and layout, apart from correction of typographical errors in the previous edition. A reprint by any publisher other than the original publisher is regarded as a re-edition;
   f. A *translation* is a publication which reproduces a work in a language other than the original language;
   g. A *title* is a term used to designate a printed publication which forms a separate whole, whether issued in one or several volumes.

Methods of Enumeration

7. Book production statistics should indicate the number of titles and, if possible, the number of copies of published works. Countries not able to supply information on the number of copies produced may, as an interim measure, supply information on number of copies sold or otherwise distributed.
   a. When a work is published in several volumes (not having separate titles) appearing over a period of several years, the work is counted each year as a single unit, whatever the number of volumes published in one year may be.
   b. However, the volume, rather than the title, should be taken as the statistical unit in the following cases:
      (i) When two or more separate works are published under the same cover and form a single publication (complete works of an author, selected plays by various authors, etc.);
      (ii) When a work appears in several volumes, each volume having a different title and forming a separate whole.
8. Reprints should not be counted in the numbers of titles, but only in the number of copies, as provided in paragraph 11, sub-paragraphs a and b below.

Classification

9. Book production statistics should, in the first place, be classified by subject groups. Until another classification system has been evolved and adopted, the classification given below, which is based upon the Universal Decimal Classification (UDC) and has 23 groups (the figures given in parentheses refer to the corresponding UDC headings), is the one which should be used:

   1. Generalities (0); 2. Philosophy, psychology (1); 3. Religion, theology (2); 4. Sociology, statistics (30-31); 5. Political science, political economy (32-33); 6. Law, public administration, welfare, social relief, insurance (34, 351-354, 36); 7. Military art and science (355-359); 8. Education (37); 9. Trade, communications, transport (38); 10. Ethnography, manners and customs, folklore (39); 11. Linguistics, philology (4); 12. Mathematics (51); 13. Natural sciences (52-59); 14. Medical sciences, public health (61); 15. Technology, industries, trades and crafts (62, 66-69); 16. Agriculture, forestry, stockbreeding, hunting, fishing (63); 17. Domestic science (64); 18. Commercial and business management techniques, communications, transport (65); 19. Town planning, architecture, plastic arts, minor arts, photography, music, film, cinema, theatre, radio, television (70-78, 791-792); 20. Entertainment, pastimes, games, sports (790, 793-799); 21. Literature (8): (a) History of literature and literary criticism, (b) Literary texts; 22. Geography, travel (91); 23. History, biography (92-99).

   School textbooks and children's books already identified in the above-mentioned subject groups should also be counted separately in the two following additional groups: (a) school textbooks and (b) children's books.
10. Each of these groups should be subdivided as follows:
    a. According to the number of the publication's pages into: (i) books and (ii) pamphlets;
    b. According to language: (i) for the total production of publications, by language of publication (ii) for translations only, by original language. Bilingual or multilingual works should form a separate group, namely: "works in two or more languages";
    c. According to order of publication into: (i) first editions, and (ii) re-editions, as provided in paragraph 11 (a) and (b).

Tables

11. Tables containing the types of data indicated below should be drawn up annually and the information given should conform to the definitions and classifications set forth in the preceding paragraphs. Attention should be drawn to any differences

between such definitions and classifications and those customarily used at the national level. These types of data are:

a. Statistics relating to the *total number of titles,* classified by subject and a distinction being made, in each subject, firstly, between books and pamphlets, and, secondly, between first editions and re-editions;
b. Statistics relating to the *total number of copies* classified by subject and a distinction being made, in each subject, between books and pamphlets. It would be desirable, so far as possible, to make a further distinction between first editions (and reprints counted with them) and re-editions (and reprints counted with them);
c. Statistics relating to the *total number of titles,* classified both by subject and by language of publication;
d. Statistics relating to the *total number of copies* classified by subject and by language of publication;
e. Statistics relating to *translations:* total number of titles, classified both by subject and by original language;
f. Statistics relating to *translations:* total number of copies, classified both by subject and by original language.

III. Statistics of Periodicals

Scope

12. Statistics of the periodicals referred to in this recommendation should cover all periodicals corresponding to the characteristics and definitions mentioned in paragraphs 1 and 3 above, with the exception of the publications listed in paragraph 2 above.
13. The following categories of publications, *inter alia,* should be counted in statistics of periodicals:
    a. *Government periodicals,* i.e., periodicals published by public administrations or their subsidiary bodies, including compilations of laws, regulations, etc., except for those which are confidential or designed for internal distribution only;
    b. *Academic and scientific journals,* i.e., university journals, the publications of research institutes and other learned or cultural societies, etc.;
    c. *Periodicals of professional, trade union, political or sports organizations, etc.,* even if they are distributed only to their own members;
    d. *Publications appearing annually or less frequently;*
    e. *Parish magazines;*
    f. *School magazines and school newspapers;*
    g. *"House organs,"* i.e., publications intended for the employees of an industrial or commercial firm or some similar enterprise, or for the clients of the firms;
    h. *Entertainment, radio and television programmes,* if the literary text in them is substantial.

Definitions

14. The following definitions should be used in compiling statistics of periodicals referred to in this recommendation:
    a. *General interest newspapers* are periodicals intended for the general public and mainly designed to be a primary source of written information on current events connected with public affairs, international questions, politics, etc. They may also include articles on literary or other subjects as well as illustrations and advertising. This definition includes:
        (i) All general interest newspapers mainly reporting events that have occurred in the 24-hour period before going to press, whether they be dailies or not (Sunday newspapers, for instance);
        (ii) Non-daily general interest newspapers which give news covering a longer period but which, either owing to their local nature or for other reasons, provide their readers with a primary source of general information;
    b. *Other periodicals* are those which are either concerned with subjects of very

general interest or else mainly publish studies and factual information on such specialized subjects as legislations, finance, trade, medicine, fashion, sports, etc. This definition covers specialized journals, reviews, including those reviews dealing with current events whose aim is to select, condense or comment on facts which have already been reported in general interest newspapers, magazines and all other periodicals apart from general interest newspapers, with the exception of the publications mentioned in paragraph 2 of this recommendation.

Methods of Enumeration

15. Statistics of periodicals should show the total number of publications and, if possible, their circulation.
16. In calculating the *total number of periodicals,* the following methods should be adopted:
    a. The following should not be considered as separate publications:
        (i) Provincial or local editions of the same publication without substantial difference in news or editorial content. A mere difference in title or in the local news pages is not sufficient for the publication to be considered as a separate newspaper;
        (ii) Supplements not sold separately;
    b. On the other hand, publications in the following categories should be considered as separate publications:
        (i) Provincial or local editions differing substantially from the main publication in news or editorial content;
        (ii) Supplements sold separately;
        (iii) Special editions (such as Sunday newspapers, etc.);
        (iv) Morning and evening dailies, provided they have separate titles or constitute separate legal entities;
        (v) Different language editions of the same publication, if published in a particular country.
17. *Circulation* figures should show the average daily circulation, or the average circulation per issue in the case of non-daily publications. These figures should include the number of copies sold, either directly or by subscription, plus the number of free copies regularly distributed, both inside the country and abroad, except unsold copies. When circulation data are not available, the number of copies printed should be indicated.

Classification

18. Periodicals should, first of all, be subdivided into two categories: general interest newspapers and periodicals.
19. *General interest newspapers:* statistics relating to general interest newspapers should, as far as possible, be classified as follows:
    a. By language; publication issued in bilingual or multilingual editions should be placed in a separate category;
    b. By frequency:
        (i) Newspapers published at least 4 times a week; a distinction should also be made between morning and evening newspapers;
        (ii) Newspapers published 3 times a week or less frequently; a distinction should also be made between newspapers published 2 or 3 times a week, once a week, or less frequently.
20. *Other periodicals:* statistics relating to this category should be classified as follows:
    a. By language; publications issued in bilingual or multilingual editions should be placed in a separate category;
    b. By frequency: periodicals which appear:
        (i) At least 4 times a week;
        (ii) From 1 to 3 times a week;
        (iii) Two or 3 times a month;
        (iv) From 8 to 12 times a year;

(v) From 5 to 7 times a year;
(vi) From 2 to 4 times a year;
(vii) Once a year or at longer intervals;
(viii) Irregularly.

c. By subject: until another classification system has been evolved and adopted, the classification given [cf. 9 above] which is based on the Universal Decimal Classification (UDC) and contains 23 subject groups, should be used for international statistics of periodicals. . . .

d. The publications in the classification below will not be counted according to the 23 groups listed above [cf. 9], but should be counted as a separate classification:
(i) Children's and adolescents' magazines;
(ii) Comics and humour magazines;
(iii) Parish magazines;
(iv) School magazines and school newspapers;
(v) "House organs."

Tables

21. Tables containing the types of data indicated below should be drawn up annually and the information given should conform as far as possible to the definitions and classifications set forth in the preceding paragraphs. Attention should be drawn to any differences between such definitions and classifications and those customarily used at the national level. These types of data are:
a. *General interest newspapers and other periodicals:* statistics of the total number of publications and their circulation, classified by frequency and by main language of publication;
b. *Other periodicals:* statistics of the total number of periodicals and their circulation, classified by subject group and by frequency of publication.

The foregoing is the authentic text of the Recommendation duly adopted by the General Conference of the United Nations Educational, Scientific and Cultural Organization during its thirteenth session, which was held in Paris and declared closed the twentieth day of November 1964.

Lending to Reprinters

REPRINTING COMMITTEE
Acquisitions Section
RTSD—ALA

REPRINTING IS NOW A MAJOR PUBLISHING INDUSTRY. Libraries have reason to be grateful for the growth of the industry and the publications which have resulted from the industry's efforts. A large part of the basic product for the reprinting of scholarly works depends upon the properties held by libraries. These are loaned to many in the reprinting industry.

The Reprinting Committee, by a sampling of policies of 72 major libraries in the United States and Canada, has attempted to determine what might be a desirable general policy for libraries to follow in lend-

ing to reprinters. The libraries responding have lent as few as one title to titles in the thousands. Most of the libraries have not yet felt the need to establish a formal lending policy or put into effect detailed procedures. A few, who work most closely with reprinters, do have established systems.

The lending arrangements of some libraries were found to be much advanced in policies and in lending records. Among these institutions are Columbia University Libraries and the Reference Department of The New York Public Library.

The Committee considered the many factors involved in lending for reprinting and arrived at some observations for discussion. The Committee believes that lending of materials, when they will not be damaged in the process of reprinting, or when they do not have a uniqueness which libraries wish to preserve, should be within the spirit of sharing with other libraries through reprinting programs. It believes, however, that the lending library must first determine whether it wishes to issue such reprints under its own name. If it decides to lend, it should consider the request of any legitimate reprint publisher of good reputation, unless there are advantages in granting privileged contracts.

The Committee is mindful that libraries, with great ingenuity and at vast cost in acquisition, preparation, housing, and protection of publications, have rights which are absolute. They should be free to refuse to lend if they wish to do so. Should they wish to share their holdings with others, they have reason to expect and insist upon conditions: that fees be paid for the privilege of commercial exploitation; that the fees cover the cost of the lending arrangements; that adequate protection be afforded the originals; that credit be given to the lending institution within the statement of the reprint edition and in the advertising of titles; that a suitable number of reprints be given to the lender—or cash or credit if the reprints are not wanted; that the reprinter reissue the publication as in its original printed form, unless special and justified exceptions are desirable; and that the paper of the reprint be of good quality.

The reprinting of the *Unesco Bulletin for Libraries* is an example of a serial which differs from the original. The reprint publishers make this clear in the new edition and in advertising. However, deletions from the original in so substantive a fashion mean that a research library is faced with the dilemma of housing both the old poor paper edition and the reprint edition which, though incomplete, is on more enduring paper.

An example of a reprint of a reprint causing bibliographical confusion is *The Complete Writings of Roger Williams,* 1963. The original work was known as Narragansett Club, *Publications,* First series, vols. 1-6, 1866-1874.

In their borrowing for reprinting, some publishers have not been entirely frank with libraries. There has been an indication that a book borrowed through interlibrary loan may provide the basis for a reprint

edition. In one known instance a reprinter sought the same book from three libraries at the same time on interlibrary loan without indicating his intention to reprint. This concealment of intention as to the reprint use of library materials should not be considered acceptable practice. Lending to such reprinters might be a matter which libraries would wish to deliberate. Libraries should always be free to deal with those in whom they have confidence and with whom they can reach the most satisfactory understanding.

While most responding libraries indicated an interest in the Committee's work as possible guidance, one librarian expressed his views strongly on the free access to libraries as a source for the reprinting industry. In part, he wrote: "Libraries ought to lend for no charge to reprinters, but of course expect them not to damage the work, and if they must unbind it to photograph to pay for suitable rebinding. . . . I see no more excuse for charging for such a loan than charging for a loan to a reader. Both uses are presumably 'profitable' to the reader, and both serve to disseminate knowledge. The fact that the reprinter expects to make a direct money profit and can afford to pay is a poor excuse. You might as well ask the user who uses the information in the book to make a profit, to pay."

As a result of its considerations, The Reprinting Committee believes:

(1) Lending for commercial reprinting should be within the sole determination of the owning library.
(2) There should be payment of fees for the lending because of the costs to the lending institution.
(3) Libraries should be free to ask for compensation above the service fees when unusual materials are lent.
(4) The original publication should be returned in condition no different than when it was lent, unless there are special arrangements for cutting the volume, rebinding it, or replacing it.
(5) The damage which a publication suffers should entitle a library to reimbursement for the amount of damage.
(6) The reprint publisher should supply an appropriate number of copies of the reprint to the lending library, if the library so wishes, or should make a cash or credit arrangement in place of copies.
(7) Time limits on loans should be observed.
(8) Libraries should be free to deal with reprinters which they consider most satisfactory to their purposes.
(9) Reprinters who depart from the conditions which libraries set should not be considered suitable partners in an arrangement.
(10) Reprints should bear a credit line mentioning the owning library, if the lending library so wishes.
(11) Reprints should be exact textual copies of the original and on good paper; when there are textual departures, these should be understood by the lending library, and variances should be boldly stated in the reprint and in all advertising for the reprint.

mansell

a new name in library publishing

In recent years Balding & Mansell have been responsible for the unique equipment and methods which have permitted the publication of the British Museum, General Catalogue of Printed Books (263 vols. 1960-66) and the Union List of Serials, Third Edition (The H.W.Wilson Company, 5 vols., 1966).

Experience gained in this and similar work is now to be applied to other major projects. New equipment and new techniques have been developed and a new company, Mansell Information/Publishing Limited, of London and Chicago, has been formed to publish catalogue, bibliographic and informational material of particular interest to libraries and librarians throughout the world.

The first Mansell title, published February 1967, is

The Brasenose Conference on the Automation of Libraries

Proceedings of the Anglo-American Conference on the Mechanization of Library Services, held at Brasenose College, Oxford, 30 June—3 July 1966

Edited by John Harrison and Peter Laslett

Organised by a group from the British Museum and Oxford and Cambridge Universities and sponsored by the Old Dominion Foundation, the Brasenose Conference brought together British and American librarians and others concerned with the application of automation to libraries and library work.

Authoritative papers contributed by representatives of the British Museum; Library of Congress; Oxford, Cambridge, Harvard, Yale, Toronto, Missouri and New York State Universities; the U.S. Department of Health and the British National Bibliography present an up-to-date and wide-ranging review of current thought and achievement in the fields of library automation.

The Conference, itself an historic venture in trans-Atlantic co-operation, clearly defined the need for and possibility of collaboration and joint endeavour at both national and international levels in applying new technologies to the increasingly exacting and manifold requirements of libraries and their users.

$8\frac{1}{2}$ x $5\frac{1}{2}$ 192 pp. Case bound $6.50

Order from

Mansell, 3 Bloomsbury Place, London wc 1, England

or through

Mansell, 360 North Michigan Avenue, Chicago, Illinois 60601

Reclassification at the University of Maryland

WILLIAM E. CONNORS
formerly *Chief of Reclassification*
University of Maryland, College Park

THE RECLASSIFICATION OF THE COLLECTION of the University of Maryland libraries at College Park began July 1, 1963. Its beginning culminated more than two years of examination and planning that grew out of a feeling that the Dewey Decimal Classification was no longer adequate for a collection the size of Maryland's or to the heightened pressure of publication and research to build quickly a still larger collection. By June 1961 the collection on the College Park campus totalled 307,068 volumes and was growing by 20,000 volumes per year. All signs pointed to an increased book budget, to the probable doubling of the collection by 1967, and, hopefully, to the cataloging of the library's millionth volume by 1970. Such rapid expansion would surely outstrip the library's ability to hire, house, and train the catalogers needed to classify in Dewey the books flooding through the Receiving Room doors.

Over the years revisions and expansions of the Dewey scheme had made necessary many local variations and adjustments which had effectively created a unique classification scheme for the University libraries. An examination of our Dewey collection showed that on many occasions we had had to construct and adjust as many as six digits beyond the decimal point—some call numbers actually had gone to nine. Coupled with this were special letters, special symbols, and special Cuttering systems used to identify a variety of types of materials. These not only contributed to the unique quality of the classification scheme at the University and magnified the need for catalog librarians specially trained in that scheme, but contributed also to imprecision of notation that did more to confuse than to help the patron.

Faced, therefore, with growing book budgets, growing staffing and training problems, and growing confusion, we turned to the Library of Congress classification system as a possible means of alleviating our cataloging problems. Our practice was already two-thirds within the sphere of LC: we were following LC's rules of entry and its subject headings; 80 percent of our catalog cards were products of the Library of Congress; and a survey showed that LC card information was available for 60 to 70 percent of the incoming books. We reasoned, therefore, that a total utilization of LC services would allow us to move forward faster. Furthermore, we reasoned that we could utilize the talents of well-trained library assistants to handle the majority of material for which LC copy is available and utilize, much more satisfactorily than before, the talents

of the professional staff to catalog the unusual, foreign language, and special categories of material which are not cataloged by LC.

The decision to begin classifying in LC was made, and in late 1962 the first books in that classification rolled out of the Catalog Room. In the ensuing months, a tentative plan of reclassification was agreed upon and a staff was drawn together.[1] The Reclassification Section was established in September 1963, and the Dewey collection began to dwindle. The reclassification of the collection on the College Park campus has been under way for nearly three years. During the past several months, procedures have been sufficiently standardized to permit one to discuss them and be reasonably sure that they will not have changed by the time he has finished talking. These, however, have been years of experimentation and change.

It was originally planned that the Reclassification Project would be a floating operation, moving from one workroom to the next, always staying close to the sections of books being reclassified. The intention was to remove books from Dewey shelves, reclassify them, process the books and cards, and reshelve the books within a day. This plan was almost immediately found impracticable. There was no space in the stacks or in adjacent rooms in which the staff could operate. Books in a given classification were shelved in several areas. Three sizes were recognized in the days of Dewey cataloging—standard, quarto, and folio—and each was to be found in a different place on a given stack level. Books in a given classification were also to be found in reference rooms, in the Reserve Room, in the Maryland and Rare Book Room, and in the Browsing Room. In addition, the proximity of Dewey shelving areas and LC shelving areas was not great. Books classified in Dewey shelved on one stack level; reclassified, they often shelved as much as two stack levels away. In short, the collection was so far flung both in Dewey and in LC that it was impossible to treat a given physical area as a unit representing an entire section of the collection. Consequently, the floating operation concept was abandoned, and the Reclassification Section has remained a fixed operation.

When this writer joined the staff of the University of Maryland libraries, he was greeted by a backlog of nearly a thousand added titles (more than three thousand volumes). This backlog had developed while the library waited for the reclassification unit to be formed because the plan had been that that unit would catalog added volumes. (I.e., books would no longer be added to the Dewey collection; instead, all added copies and volumes coming to the library would be classified immediately into LC and, at the same time, their companion volumes, at present in Dewey, would be reclassified into LC.) It took only a few months to see that this scatter-gun approach to the reclassification of 350,000 volumes would not work. A staff of five instead of the requested twenty-two could not run down scattered copies of books in circulation, on re-

[1] The original plan of reclassification is discussed in Carl R. Cox's "Reclassification Planning at the University of Maryland," 1963, unpublished.

serve, in reference rooms, and in limbo. By the time the backlog had been eliminated, a new collection of more than 500 titles had taken its place, and no progress towards a systematic reclassification of the collection had been made. Consequently, this approach was abandoned. Since then, an added volumes clerk in the regular cataloging section has added new copies both to the LC and to the Dewey collections, causing the Dewey collection to continue growing but allowing the Reclassification Section to get on with the job of transferring the collection into LC with a minimum of involvement in the procedures for new books.

After abandoning added volumes, the Reclassification Section began to transfer books to LC by working block by block through the Dewey collection, eliminating one Dewey classification before moving on to another. First eliminated were some special lettered schemes created by the University of Maryland Library which seemed likely to be confused with LC classifications. The Section was then confronted with the problem of deciding where in the Dewey collection to begin. The stacks had, of course, been divided into two major areas, one housing the Dewey collection, the other housing the LC collection. The Project could not merely reclassify books and return them to the shelves from which they came. Yet, it was economically desirable to shift books around the stacks as little as possible. In nearly every area, however, the crowded condition of the stacks precluded adding books to the collection in any numbers without major shifts. The only area that could be added to with practically no shifting was the LC area containing the Q, R, S, T, U, and V classifications (the mathematical and pure sciences and technology). This area was relatively empty. The corresponding area, containing the Dewey 500's and 600's, could be reclassified and moved to the LC area, thereby opening a huge stack area in preparation for the reclassification of books in still another area without requiring the shifting of any books other than those being reclassified. Logistically, this seemed the best place to begin. The plan was adopted and has been followed since.

The Reclassification Section then went to work on the Dewey 500's, developing the following procedure: Books are removed in classified order from the stacks and brought to the work area, where their shelflist cards are pulled. Cards for which there are no books available—whether the books are lost, misshelved, or in circulation—are ignored and are left in the Dewey shelflist. A temporary card is prepared for each book, noting its author, title, and date of publication, and indicating that the book is undergoing reclassification. This card is filed in the public catalog, replacing the main entry which is pulled and matched with its shelflist card and the book it represents. This preliminary work is performed by student assistants.

At this point 70 to 80 percent of the books are ready to be reclassified. The card for each is LC copy with an LC call number printed at the bottom of the card. The book, with its main entry and shelflist card, is delivered to a reclassifier, who changes the call number in the book to the LC number found on the card, prepares a work slip, instructing the

typist to change the card's call number from Dewey to LC, and to order the required number of cards from the Xerox machine operator, and requests that a label be made for the book's new call number.

All aspects of the LC card are accepted without modification unless an obvious error has been made in the printing of the card. Because the University of Maryland has used LC added entries, no adjustment of the tracings of the main entry is required. The LC call number is used as it is printed, complete from classification through Cutter number. No adjustment of the number is made unless a duplication is found during the shelflisting procedure. When a book is classified, a temporary shelflist card is filed to reserve the call number of the reclassified book. Occasionally, this reveals a duplication of call numbers which is brought to the attention of a reclassification cataloger who eliminates it by adjusting the Cutter number of the book being reclassified.

This adjustment made, the holdings on the Dewey shelflist card are examined: Any copy listed on it but not in hand to be reclassified is noted as missing on that card, while the record of copies in hand is lined out. If some copies remain in Dewey, the card is retained to be refiled in the Dewey shelflist. If, of course, all copies are accounted for and reclassified, the Dewey shelflist card is destroyed. This done, the work order and the cards are sent to the typists, and the book is sent to be processed.

The typists prepare a complete set of cards to replace the Dewey cards in the catalog. Using the Dewey main entry card as a master card, they Sno-pake over the Dewey call number and clean the card of pencil marks and the worst scars of usage. If a card is badly yellowed or battered or if major changes have to be made in the copy, they retype it on a clean card. They send the master card to the Xerox room, where the desired number of unit cards is reproduced. The cards are Xeroxed and returned to the typists in the same morning. This done, the typists complete added entries and shelflist card according to the work slip instructions.

In the meantime, labels are typed by student assistants on stock manufactured by Avery and distributed by Demco. It is worth noting that, on the basis of our experience, labels distributed directly by Avery seem not to have the same adhesive on them and not to adhere to buckram nearly as well as do those distributed by Demco. Olympia bulletin typewriters are used to transcribe call numbers onto the labels.

The completed cards and labels are matched with the book. The book is processed by eradicating its Dewey call number from the spine with Magic Markers, attaching the new label, and smearing Elmer's glue over the label to prevent it from curling off the book. The book is then revised and delivered to the general cataloging section, where it enters the main stream of cataloging procedures; there it receives circulation cards from the Data Processing Section and is sent to the Loan Department for shelving. Cards are then revised and filed in the public catalog and in the shelflist.

The final filing is done by student assistants. This is feasible because the process of reclassification replaces entries that are already in the catalog. With a minimum of training, a student can find cards in the catalog that, except for call numbers, are duplicates of the ones he has in hand. He merely replaces the old with the new. It is necessary to revise only the filing of the few cards for which he finds no duplicates.

With the 20 percent of the books for which LC cards are not available in the McKeldin Library catalog, an additional pre-reclassification step must be taken. To establish the call numbers of these books, a search is made by student assistants who, having found LC copy, reproduce it with a 3M brand, model 107 dry photo-copier. Although not a completely satisfactory machine—it cannot enlarge the size of the copy from the miniscule print in the LC catalogs, and it sometimes jams and burns the paper being fed into it—the 3M photo-copier produces usable reproductions which are attached to the main entry cards and sent to the reclassifier. This done, the books and cards undergo the treatment outlined above. For about 3 percent of the books being processed, classification cannot be established by this means. These books, accompanied by their main entries and shelflist cards, are delivered to a catalog librarian, who classifies them and returns them to a reclassifier for normal handling.

Serials and periodicals are classified at the McKeldin Library and, therefore, are involved with the rest of the collection in reclassification. Essentially they are treated the same as are monographs. The only significant variation is that the serial volumes are processed and sent to the stacks before their cards are finished and filed. This practice is the child of expedience; it permits the removal of long runs of volumes from a badly overcrowded work area.

The basic intent of the Reclassification Project has been to accept the Library of Congress as the ultimate authority for entry and classification. With practically no exception, this intent has been carried out. Such a plan, however, has not been without its problems. Frequently, recataloging as well as reclassification is necessary to adjust the McKeldin Library collection to that of the Library of Congress. In trying to establish a call number by searching *NUC*, one frequently finds that a main entry established at the McKeldin Library varies from that used by the Library of Congress. The same problem arises when the reclassifiers discover that the McKeldin Library has treated as a monograph what the Library of Congress catalogs as a serial—or vice versa. Again, the McKeldin Library adjusts itself to LC.

This adjustment is sometimes quite intricate and is always very time-consuming. If several numbers of a serial which is to become monographs are already bound, several monographs must be classified alike and have "bound with" notes typed on their catalog cards; or the bound volumes must be broken and rebound as several separate pieces. The former procedure was chosen as ultimately the less expensive in time and money.

Perhaps most frustration has been caused by the effort to conform to series entries used by the Library of Congress. Unless the series form is specifically and fully stated in series tracings, Library of Congress series tracings are very often undependable as guides to series entries, i.e., the tracing "(Series)" does not guarantee that the series tracing should be identical in form to the series statement in the collation. Nor is the absence of the tracing "(Series)" a guarantee that the Library of Congress does not use a series that appears in the collation. Series entries in LC's public catalog were checked against corresponding main cards in the published catalog and these facts conclusively proved. The Reclassification Project, therefore, had no choice but to use or not use series at its discretion and to establish series entries (except where specifically established by the Library of Congress) according to the *ALA Cataloging Rules for Author and Title Entries* and without assistance from the Library of Congress. It set up a series authority file against which all series encountered are checked to see whether they are used and, if used, what their form of entry is. As general guidelines, publisher series, except for university press series, are not used. Used are university press series, series of societies and institutions, and distinctive name series of particular subject interest.

The equipment and material used to replace the Dewey cards and reprocess the books are standard for all cataloging at the McKeldin Library. Card stock supplied by Walker-Goulard-Plehn of New York is prepunched, pre-perforated 100 percent rag, four cards to a sheet, arranged so that the top of each card has no rough edge. Investigation is currently being made to determine the feasibility of six and eight card sheets. The cost of the sheets is nominal: $20.80 per thousand or .50 cent per card. Xeroxing adds .947 cent per card to this cost. The Xerox rental is a standard 3.5 cents per exposure or .875 cent per card, plus $25.00 per month. The monthly charge causes the cost to vary with the rate of production.[2] The annual average at the University of Maryland is currently .947 cent. To this must be added machine operator costs of 1.324 cents per card and the .50 cent per card stock cost for a total of 2.771 cents per card. The basic cost per set of six cards is, therefore, 16.626 cents.[3]

The cost of card production is, of course, only a fraction of the total cost of reclassification. Substantial budgets had to be provided to cover the time and manpower required to change classifications. The total budget has increased by nearly two-thirds in the three years of the Project's operation. What has been the cost and what has been accomplished?

The Reclassification Project began officially in July, 1963 but did not get underway significantly until the following September. The staff drawn together at that time consisted of two library assistant typists, two library assistant reclassifiers, and one professional librarian to direct the operation. It was not long before the typists were also reclassifying simple

[2] See Table I for 1965/66 card costs.

[3] This is far less than half the Library of Congress card cost of at least 40 cents, a figure that does not consider clerical cost.

monographs one-third time while they typed two-thirds time. This arrangement proved satisfactory, because the typists were quite capable of handling routine books and, with little training, quite able to identify extraordinary items that needed the attention of more highly-trained persons. The staff was increased by two in July of the following year. An additional typist joined the staff and soon took up duties identical to those of the other typists. A second professional was hired to assist the chief of the Project. In the third year two more library assistants arrived, one typist and one reclassifier.

In the third year, the perennial problem facing technical services sections—the problem of space—conquered the Reclassification Section. The Section had entirely outgrown its quarters, and no more space was available where it could be housed as a unit. Consequently, it was split into two groups—reclassifiers and typists—which were housed two floors apart. Because this separation removed the typists from effective immediate supervision, it precluded their reclassifying books. In the third year, therefore, although the staff is larger, there are fewer reclassifiers than there were in the second.

The output of the reclassification group reflects the changes in staff and of duties assigned; it also reflects changes in the focus of work. The first ten months of the Project's existence were months of experimentation, modification, and refinement. The output was low, averaging only 565.2 titles and 1365 volumes per month. The twelve months that followed were stable. The staff was fully trained; it was housed near the library tools it needed; its efforts were concentrated in a specific area of the Dewey collection—the 500's—and its procedures were settled. The monthly output reflected this stability: an average 783.3 titles and 1713.3 volumes changed classifications each month. Through March of the current year, fiscal 1965/66, the monthly title average has dropped to 730 but the volume count has continued to rise, averaging 2232.1 volumes per month.[4]

The total cost of the Project has risen steadily, too: in 1963/64 more than $31,000 was budgeted; the budget was increased to more than $41,000 in fiscal 1964/65, then rose to more than $52,700 in fiscal 1965/66. These sums include personnel costs as well as operating costs for supplies, equipment, and depreciation. The unit costs for reclassification fluctuates, of course, with the output. In 1963/64 it was $4.59 per title and $1.90 per volume. Both costs dropped substantially in fiscal 1964/65; the per title cost was reduced to $4.41 and the per volume cost to $2.02. In fiscal 1965/66 the per title cost has risen sharply to $5.77, but the volume

[4] The volumes count took a colossal leap in April and May, 1966, to 5188 and 4426 volumes respectively. The increase is the result of the Project's completing the reclassification of the Dewey 500's and its experimenting with the reclassification of current serial and periodical titles almost exclusively. This pace, of course, can be maintained, given the current staff size, only where multi-volume materials are being reclassified. If this experiment goes as projected, all serials and periodicals will be in LC by late 1967. Then the output will return to a more normal 2000-2300 volumes per month.

Table I

XEROX CARD PRODUCTION: MARCH 1965—FEBRUARY 1966.
Xerox rental: $25.00 per month plus 3.5 cents per exposure

Month	*Sheets exposed*	*Cost per sheet: cents*	*Cost per card: cents*
March 1965	14437	.173 + 3.5 = 3.673	.918
April	15240	.164 + 3.5 = 3.664	.916
May	4387	.569 + 3.5 = 4.069	1.017
June	7681	.325 + 3.5 = 3.825	.956
July	9123	.274 + 3.5 = 3.774	.943
August	12749	.196 + 3.5 = 3.696	.924
Sept.	8167	.317 + 3.5 = 3.817	.954
Oct.	7691	.324 + 3.5 = 3.824	.956
Nov.	9561	.272 + 3.5 = 3.772	.953
Dec.	8584	.291 + 3.5 = 3.791	.918
Jan. 1966	7078	.353 + 3.5 = 3.853	.963
Feb.	7385	.338 + 3.5 = 3.838	.959
TOTAL	112083	Average cost per sheet 3.799	Average cost per card .947

Operator's annual wage	$5052
Student Asst's wage	884
	$5936
Operator cost per card: cents	1.324
Average cost per card, 1965/66: cents	
stock	.50
Xerox	.947
operator	1.324
Total	2.771
Average cost of set of 6 cards 1965/66: cents	16.626

cost has declined, averaging $1.97 during the first nine months of the year. Changes in the ratio of titles to volumes reclassified have caused much of the fluctuation, but the drop in per capita output has contributed both to the sharp rise in cost per title and to the failure of the cost per volume to continue to drop below the 1963/64 level.

It is difficult to assess the relative cost of serial and monograph reclassification. Obviously, it costs more to reclassify one hundred monographs with one hundred sets of cards than to reclassify a one hundred volume serial with one set of cards.[5] But relative expenditures of time—professional, clerical, and student assistant—must be taken into consideration. Unfortunately, separate time studies are not available on them for this project.[6]

What has been learned in the two and one-half years of the Project's life? Library assistants can be trained to do the majority of reclassification work. Student assistants are able to do the leg-work, searching, and filing. Xeroxing, not only for reclassification but for all card reproduction, is inexpensive and quick. A systematic approach is essential. Moving through the collection in all directions at once is wasteful in time and in money. Other approaches than the University of Maryland's are possible. Perhaps it is too big a waste to take out of Dewey while at the same time adding volumes and copies to it. A method of directing added copies and added volumes into LC should probably be found. Perhaps it is uneconomical to reclassify across the board, being unconcerned whether the books handled are dead and unused or living and circulating. Some means of reclassifying those items returning from active use might be considered.

Perhaps most importantly, the expenditure of time is too great. The Maryland Reclassification Project was to be done in two years. A staff of twenty-two was requested in order to complete the job in that time. In three years the staff has grown from an initial five to a current nine persons. In two and one-half years the staff has been able to send 51,964 volumes to the stacks under a new classification—one seventh of the collection. At its present rate, the Project has another dozen years to run to completion. Costs will rise, trained staff will leave, and new staff will have to be trained—an expensive undertaking. In the meantime the collection is split, staff and patron must concern themselves with several locations, and the collection continues to grow. Perhaps it would be far-sighted to get the job done quickly.

---

[5] It is interesting to note that in April and May 1966, during the reclassification of serials and periodicals almost exclusively, when the ratio of titles to volumes reclassified changed to 1 to 150, the per title cost skyrocketed to $13.37 but the per volume cost correspondingly dropped to $.88.

[6] Rough estimates show that during April and May 1966, students, working with serials and periodicals alone, were able to process about 26 volumes an hour. Nearly four hours of additional preparation—classification, typing, Xeroxing, filing—were required to prepare all records for the return of those books to the stacks.

TABLE II

RECLASSIFICATION STATISTICS

	1963/64 (10 mos.)	1964/65 (12 mos.)	1965/66 (9 mos.)	Total
Titles Reclassified				
Monographs	5,413	9,073	6,126	20,612
Serials	239	327	547	1,113
Total	5,652	9,400	6,673	21,725
Volumes Reclassified				
Monographs	7,379	13,183	8,739	29,301
Serials	6,279	7,397	11,350	25,026
Total	13,658	20,580	20,089	54,327
Funds Expended				
(Total for personnel, equipment, supplies, including Xerox costs)	$25,929	$41,512	$39,528	$106,969
Cost per title	$4.58	$4.41	$5.77	$4.92 (avg.)
Cost per volume	$1.90	$2.02	$1.97	$1.96 (avg.)

WOODEN CARD CATALOG CABINETS

The Council on Library Resources, Inc., has made a grant of $10,000 to the ALA to assist in meeting the cost of an investigation of the performance characteristics of wooden card catalog cabinets, to be conducted by the Library Technology Program.

Examples of all brands of wooden card-catalog cabinets used by libraries and manufactured within the United States, will be tested by Buyers Laboratory, Inc., New York City. The tests will relate to structural strength, durability of finish, and performance characteristics under conditions of use (such as dropping the trays on the floor).

COLORADO SPECIAL LIBRARY RESOURCES DIRECTORY PUBLISHED

The Colorado Chapter of Special Libraries Association has published a directory, *Specialized Library Resources of Colorado—1966*. The directory, published in December 1966, was compiled and edited by Lawrence E. Leonard, Chief Librarian, Boulder Laboratories Library, Environmental Science Services Administration, and Carolyn M. Leonard, Serials Librarian, University of Colorado, and lists information regarding 169 special libraries and specialized collections in Colorado. Entries are arranged by geographic location and include name of library, address, telephone number, number of staff, name of supervisor, year library established, accessibility of collection to public, hours of opening, size of collection, subject scope, special collections, interlibrary loan and copying services available. Entries are indexed by subject, library staff members, depository libraries, and by type and name of library.

Copies of this 78-page directory may be obtained by sending check or money order for $3.25 each (payable to Colorado Chapter, Special Libraries Association) to Mrs. Frances M. Busch, Treasurer, Colorado Chapter, SLA, 2770 South Monroe, Denver, Colorado 80210.

Long Files Under LC Subject Headings, and the LC Classification

SIDNEY L. JACKSON, *Professor*
School of Library Science
Kent State University, Kent, Ohio

MANY A LIBRARY TODAY utilizes Library of Congress subject heading service for particular titles, and more doubtless will do so as centralized cataloging and technological advances proceed. The adequacy of that service depends, to a degree not generally appreciated, upon using also the Library of Congress classification. Libraries relying on the Dewey Decimal Classification—the great majority, even of the larger institutions—may benefit from a few examples illustrating the point.

These examples have been chosen from the half-dozen subject headings appearing most often (without subdivision) in the Library of Congress publication, *Books: Subjects,* 1950-54 and 1955-59. Under such headings, in perhaps dozens of libraries, repose long files (say, upwards of 200 cards), nearly always in a single author-alphabet. That is known to be a disadvantage because users tend to consult only the first portion of mammoth files. Reducing the size of a unit of subject guidance, preferably by providing greater specificity, is therefore a worthy objective. It is hoped that discussing briefly CHILD STUDY, ECONOMICS, and WORLD WAR, 1939-1945—FICTION, will help clarify both the large file question, and the basic relationship between LC subject headings and the LC classification.

CHILD STUDY is likely to appear,* in almost one case in four, over a work classified by the Library of Congress BF721, "Child Psychology," a special topic under "Genetic Psychology." About one-half to one-third as often, that heading will be assigned to a title in BF723, LB1115, LB1117, or HQ772. The first is for "Special topics" in Child Psychology like "Competition," and the corresponding letter (C) is added to the basic number. The two LB classes run in rough parallel, respectively for "General" and "General Special" items under "Child Study" as a division of "Theory and Practice of Education." Works classed in HQ are family-centered. These distinctions, of course, are not necessarily revealed by the tracing; nor will the riches of the Dewey Decimal Classification always solve the problem.

ECONOMICS is likely to appear, in about one case in four, over works classed HB179, "Recent Economic Thought (1843-76—)" by

* This and the similar statements following are based on a study of the classes assigned to the works in question, in *Books: Subjects* for 1955-59. The details are to be published in *Aspects of Librarianship,* New Series (Kent State University Department of Library Science).

European authors "Other" than English, French, German, or Italian. About one in four titles under ECONOMICS also fall to either HB171.5, English or American textbooks, or HB171, English or American general works not textbooks. There are smaller groups besides, like books classed HB71, "Economics as a science." Again, the specificity recorded in the LC classification is not matched by ECONOMICS; neither the tracing as a whole nor a DDC number will assuredly furnish a solution.

About one fourth of the works listed under WORLD WAR, 1939-1945—FICTION, are likely to be classed PZ4. Here, even the LC class-mark is of little help, since it means merely recent fiction in English. The Library of Congress itself, in such instances, needs better subject heading service.

The point is that large files, probably discouraging to the searcher, have been left in that condition often enough to merit attention, partly because the Library of Congress classification frequently affords more specific subject approaches to the material than its subject headings are capable of. Obviously, that may not be of any help to the person consulting subject cards at the Library of Congress, who is not familiar with the classification schedules. But it is at least a resource theoretically available, a resource not matched, by and large, by Dewey numbers. The Library reproducing LC copy, but omitting the LC classmark, may be short-changing its patrons on subject analysis considerably more often than it realizes. Particularly is this true of materials under headings not divided by place.

Ideally, the Library of Congress would have additional manhours authorized to refine those subject headings by such devices as ECONOMICS—1843-76—FRENCH AUTHORS; COMPETITION (CHILD PSYCHOLOGY); and WORLD WAR, 1939-1945—CAMPAIGNS—ITALY—FICTION. Or libraries would sub-file their ECONOMICS cards and others of that sort by the LC class—with a guide card explaining the practice. Or maybe, some day, they will arrange long-file subject cards in the fashion demonstrably* more useful to patrons: by date, the most recent in front, and from time to time remove the older materials from the subject file.

Practically speaking, libraries preparing, or contemplating the preparation of book catalogs, are fortunate. They have to edit copy in any case and might well include this particular element in their planning. After all, searching the upper portions of 200+ cards is nuisance enough; but running the eye willy-nilly over 200+ complete entries on the pages of a book seems to some of us who have done it, a good deal worse, especially if the print is smaller than catalog-card type. Something to think about.

Having set forth sample facts, one can at least urge other libraries to reflect on the larger phenomenon. Those using LC copy would be smart to retain the LC class-mark on their cards at least where those headings are to be assigned which most often accumulate long files. (A suggested

* Jackson, S. L. *Catalog Use Study*. Chicago, A.L.A., 1958. pp. 33-38.

list is available from the present writer). It would probably be wise for them also to keep handy the LC classification schedules; some refresher study might not be amiss, especially for staff members engaged in either reference work or cataloging whose duties oblige them to make use of the strikingly-long files. Incidentally, several of the LC schedules include assemblages of data very helpful for purely reference purposes. And they cost very little.

Two things are reasonably clear: subject files exceeding two hundred entries in a single author-alphabet are dubious assets, and the prospective automating of cataloging from LC copy will not of itself solve the problem.

IN THE MAIL: CLASSIFICATION

It seems that hopes for economization in processing form a large part of the pressure on American libraries to change their classification to LC. It also seems that dissatisfaction with DC17 plays a large part. But such reasoning (whether correct or incorrect—and at least the first is probably largely incorrect) misses the point, or better the several points, that must be made about classification before the money argument can be allowed to come up in any more than a hypothetical form. These several points are all included in the questions 'What is classification?' and 'What is classification for?' But anyone who does not realize that classification is not just a system of parking-symbols—that it, in fact, is an intellectual process playing the part of mind and memory in libraries; and that its theory guides not merely shelf order but also the order and structure of the catalog—has not made even the first necessary step towards a functional understanding that can guide his decisions. Classification, most librarians will admit, is not exclusively confined to shelf order: there is the classified catalog, after all. But *every* subject catalog is in some sense classified, since subject-headings depend upon an implicit classification, too.

Classification then reflects and is analogous to thought; and it is a tool for reference. It performs this tool-function by correlating ideas, just as language does for thought in general. It also does so by grouping: next-most-relevant next to most-relevant—or at least by syndetic connectives. All this to handle the primordial reference question: 'What, this first attempt having failed, next?' A classification must therefore be judged by the degree to which it groups ideas so as to provide next-most-relevants, by its ability to make correlations equivalent to those of the documents incorporated into it, and by its adequacy in representing these conceptual characteristics notationally. LC, if any classification does it, shows how a classification can be built with only minimal concern for the first criterion and none at all for the second and third.

To change to LC, then, without realizing all this (and, of course, a great deal more of the same than can be given so briefly here), just for the sake of an only *possible* saving (since the proportion as well as the absolute number of DC assignments is on the rise), is surely a betrayal of all our profession must stand for, namely, the efficient provision of documentary relevances.

I do not, though, in any way derogate the attempt to provide centralized cataloging and/or classificatory data—particularly in the context of automated library networks. But the fact that we may be able to save a few cents on each accession should only impell us to see what we can do with our savings, investing them in better provision. Automation, in particular, should be a means not

simply of saving money, but of increasing efficiency; but it cannot possibly do so without a thorough comparative examination of the available strategies for provision through search.

We may well need to look beyond LC, DC, or subject-headings; we may well need to agitate for the establishment or adoption of a search strategy better than any of these, centrally, so that money can be saved along with functional improvement. It is to lay down the criteria on which this choice can be made that I have written (among others) "On Bibliography and Automation" (*Libri*, 15:287-339. 1965) and "Re-Classification: Some Warnings and a Proposal" (to be published in the near future by the Graduate School of Library Science at the University of Illinois, as its *Occasional Paper*, No. 87). —*Jean M. Perreault, Lecturer, School of Library and Information Services, University of Maryland, College Park.*

MANUAL OF ARCHIVAL PRACTICE

The University of Illinois has received a $10,000 grant from the Council on Library Resources to prepare a manual of university archival practice with respect to records of academic scientific research. The project will be carried out between September 1966 and January 1968 by the University Library at Urbana, under the direction of Maynard Brichford, University Archivist.

The investigation will cover research on documentation techniques and means of teaching archivists and manuscript curators the principles governing the historical documentation of scientific and technology research.

It will require engaging in records inventories, studying project documentation techniques, processing material for archival storage, classifying and describing records series, preparing supplementary finding aids, boxing and shelving archival material, providing reference service, interviewing scientists and engineers concerning their careers and research work, and tape-recording recollections of prominent scientific researchers and administrators. It also will involve preparing written policy and procedure statements describing each activity.

In exploring the evaluation and processing of scientific and technological records, the project will assist archivists in identifying, collecting, and preserving historical documentation needed for the appraisal of university contributions to scientific knowledge, the dissemination of scientific information, and scientific education.

FUNDS RECEIVED FOR LIBRARY AUTOMATION SURVEY

The Library Technology Program of the American Library Association has granted funds to underwrite a SLA-LTP Joint Survey of Library Automation Activities, which will be undertaken cooperatively by the Documentation Division of Special Libraries Association and LTP. The purpose of the survey is to determine the extent, future plans, and kinds of automation activities engaged in by technical, scientific, research, medical, law, business, and other special libraries as well as large public and university libraries in the United States and Canada.

Creative Research Associates, Inc., of New York City, will conduct the study by analyzing the returns of questionnaires mailed to 14,050 libraries.

Predicting the Need for Catalog Expansion

FRED HEINRITZ, *Assistant Professor*
School of Library Science
University of North Carolina at Chapel Hill

MOST LIBRARIES HAVE CARD CATALOGS, with cards being added daily to them. It is therefore useful to be able to predict how long from the present it will be until a particular catalog will be filled and need to be expanded. The general solution is simply to divide the number of additional cards for which there is space in the catalog by the average predicted number of cards to be added to the catalog per year, the quotient being the years from the present until expansion will be necessary. When the evidence indicates that an approximately equal number of cards will be added to the catalog each year, then this number may be used directly as the divisor in the general solution, making the arithmetic very easy.

There is abundant evidence, however, to indicate that for many libraries the yearly number of cards added to the catalog is increasing. In such cases, although the general solution to the problem remains the same, the mathematical details are considerably more complex. Even though the number of cards added per year may increase, the *rate of catalog growth* may remain very close to constant. When this happens the solution is reached by determining the logarithm of the quotient of the total card capacity of the catalog divided by the present number of cards in the catalog, and then dividing this number by the logarithm of the quantity one plus the annual rate of catalog growth (the rate being expressed as a decimal).

By using the accompanying table, a solution may be obtained directly, without logarithms, for most cases to be met with in practice. For example, suppose that the annual rate of catalog growth is six per cent, the total catalog capacity 240,000 cards, and the present number of cards 178,000. Dividing 240,000 by 178,000 gives a quotient of 1.35. At the intersection of the row marked 1.35 and the column marked 6% we find the answer: 5.1 years.

This same table may be used to determine the number of additional drawers which must be purchased for an expansion to last a given number of years. Search down the appropriate rate column until you come to the chosen number of years. Then subtract one from the quotient of this row and multiply the remainder by the number of drawers in the present catalog, this product being the answer. (This procedure assumes the common situation where the drawers to be added are the same standard size as those in the present catalog. For two different drawer sizes the procedure is somewhat more complex.) For instance, suppose that we want the next expansion to give five more years of card space

(over and above that remaining in the present catalog), that the rate of catalog growth is 7%, and the present number of drawers 540. Looking down the 7% column we find 5.0 years in the row with the quotient 1.40. One from 1.40 leaves 0.40. Multiplying 0.40 by 540 gives an answer of 216 drawers.

Finally, it should be noted that this table can also be useful in book catalog operations. For total catalog capacity we substitute the practicable or desired size of a cumulation, and for present cards we substitute (if the supplement is not already a card catalog) the number of entries to date in the supplements to be cumulated.

Years from the Present before Catalog Expansion will be Necessary

Annual Rate of Catalog Growth

Q	1%	2%	3%	4%	5%	6%	7%	8%	9%	10%
1.05	4.9	2.5	1.7	1.2	1.0	0.8	0.7	0.6	0.6	0.5
1.10	9.6	4.8	3.2	2.4	2.0	1.6	1.4	1.2	1.1	1.0
1.15	14.1	7.1	4.7	3.6	2.9	2.4	2.1	1.8	1.6	1.5
1.20	18.3	9.2	6.2	4.6	3.7	3.1	2.7	2.4	2.1	1.9
1.25	22.4	11.3	7.5	5.7	4.6	3.8	3.3	2.9	2.6	2.3
1.30	26.4	13.2	8.9	6.7	5.4	4.5	3.9	3.4	3.0	2.8
1.35	30.2	15.2	10.2	7.7	6.2	5.1	4.4	3.8	3.5	3.1
1.40	33.8	17.0	11.4	8.6	6.9	5.8	5.0	4.4	3.9	3.5
1.45	37.4	18.8	12.6	9.5	7.6	6.4	5.5	4.8	4.3	3.9
1.50	40.8	20.5	13.7	10.3	8.3	7.0	6.0	5.3	4.7	4.3
1.55	44.1	22.1	14.8	11.2	9.0	7.5	6.5	5.7	5.1	4.6
1.60	47.3	23.7	15.9	12.0	9.6	8.1	6.9	6.1	5.5	4.9
1.65	50.3	25.3	16.9	12.8	10.3	8.6	7.4	6.5	5.8	5.3
1.70	53.3	26.8	17.9	13.5	10.9	9.1	7.8	6.9	6.2	5.6
1.75	56.3	28.3	18.9	14.3	11.5	9.6	8.3	7.3	6.5	5.9
1.80	59.1	29.7	19.9	15.0	12.0	10.0	8.7	7.6	6.8	6.2
1.85	61.8	31.1	20.8	15.7	12.6	10.6	9.1	8.0	7.1	6.5
1.90	64.5	32.4	21.7	16.4	13.2	11.0	9.5	8.3	7.4	6.7
1.95	67.1	33.7	22.6	17.0	13.7	11.5	9.9	8.7	7.7	7.0
2.00	69.7	35.0	23.4	17.7	14.2	11.9	10.2	9.0	8.0	7.3

Quotient obtained by dividing the total card capacity of the catalog by the present number of cards in the catalog

REVIEWS

(Editor's note: Reviews published in this magazine have a deliberately-chosen viewpoint. That is, reviewers are asked to consider publications primarily on the basis of their meaning and contribution to the areas of our interest: the building of library collections and the absorption, care, and control of the materials comprising the collections.)

Union List of Serials in Libraries of the United States and Canada. 3rd ed. New York, H. W. Wilson Co., 1965. 5 vols. (4649 p.) $120.00.

The *ULS, third edition,* was published early in 1966 in 5 volumes. It brings together the information from *ULS,* second edition with its two Supplements of 1941 and 1953 and includes some new bibliographical data submitted by cooperating libraries.

One million entries from the *National Union Catalog,* the *Southeastern Supplement to the Union List of Serials,* and other sources were searched and considered for inclusion in *ULS, third edition.* The selection process precluded serials with a beginning date of 1950 or later; the final selection lists 226,987 entries of which 70,538 are cross references.

Howard Rovelstad, Chairman, Joint Committee on the Union List of Serials, wrote for the "Introduction" a masterful account of the half century development of the *ULS* from the appearance of the first edition in 1927 to the present third edition. In the "Preface," Edna Brown Titus has clearly and concisely explained the method of editing, selecting, and producing the bibliographical data. Budgetary restrictions limited the content and scope of the list; this limitation must be understood for intelligent use of the list.

"Classes of Serials Generally Excluded" from the second edition and its supplements are followed in the selection of new titles for the third edition. Those excluded are:

"1. Government publications (except periodicals and monographic series issued by governments).
2. Administrative reports of societies, universities, corporations, etc.
3. Almanacs, gift books.
4. American newspapers.
5. English and other foreign newspapers published after 1820.
6. Law reports and digests.
7. Publications of agricultural and other experimental stations.
8. Publications of local, religious, labor and fraternal organizations, boards of trade, chambers of commerce.
9. Publications of national and international conferences and congresses, etc.
10. House organs (unless of technical or scientific value).
11. Alumni and undergraduate and intercollegiate fraternity publications.
12. Trench papers.
13. All titles having a highly limited or ephemeral value.
14. United Nations publications."

Further, "It was decided . . . that additional locations for new serial titles acquired by cooperating libraries since the second edition and supplements were to be recorded in the third edition for significant titles only—titles not commonly held. Additional locations were not to be listed whenever ten or more locations had already been listed in the second edition and supplements unless considered both desirable and necessary—e.g., geographical considerations. The purpose of this policy restriction was to avoid the need to record an excessively large number of locations for commonly held titles; and also, that in view of the methods to be used in the compilation of the third edition, it was the

general view of the Committee that ten locations would be considered sufficient in most cases."

This limitation is one of the unfortunate consequences of poverty. The years covered by the holdings reported in this third edition were most significant growth periods for new and major research libraries. Nevertheless this list is a great achievement. It was made possible by a group of devoted and dedicated personnel who squeezed every cent of value out of the budget alloted for the work. Standards of excellent competence are evident in the meticulously assembled bibliographical data developed in staggering technical detail. Serials librarians view with admiration and awe the searching done under Mrs. Titus, the capable and enthusiastic editor, to gather and organize this information.

The saga of the preparation for publication should be written in full and published. I was fortunate in obtaining a first hand account of this from Mrs. Titus when I met and kidnapped her during the ALA Conference in Cleveland in July 1961. She described with gestures the complex system of mounting the bibliographical data from the second edition and Supplements on boards for editing, and numbering them in preparation for the Balding and Mansell photographic reproduction method. This is a unique type of abstracting photography. It was used for publication of the *British Museum's General Catalogue of Printed Books.* The volumes are printed on special paper manufactured by the famous Wolvercote Paper Mill, Oxford, England, so that they will be durable over a long period of hard usage. At this time there are no specific plans for another edition of *ULS,* although the Joint Committee on the Union List of Serials is continuing its work, devoting time to planning the future scope of *New Serial Titles* as the organ to maintain the *Union List of Serials.*

Serials librarians would like to have the "Changes in Serials" which is now published in the back of *New Serial Titles,* gathered together and issued separately. Such a separate publication would be especially helpful for the entries recorded in the *Union List of Serials,* third edition.

In this age of computer methods it would be a significant contribution to American librarianship to implement Andrew D. Osborn's *A Permanent Program for the Union List of Serials* (1957). Only financing delays this program (poverty again) and hope for this funding has been rekindled by the appointment of ARL's Committee on a World Inventory of Serials.

The *Union List of Serials,* third edition is a distinguished contribution to bibliography. It will save much time for those doing research and for all concerned with the various aspects of serials. All of this bibliographical information gathered in one publication is valuable for verification of publications and tracing the history of titles. It also provides an intelligent means for building a library's collections of serials.

For instance, the confusion about the publication of *Chemisches Zentralblatt* in two "authentic" editions, one from East Germany, the other from West Germany during the post-World War II period, is clarified and captured for future researchers and serials librarians. The tracings for the frequently cited, long-lived, *Journal des Savants* are delineated too.

Libraries contemplating the use of computers should be interested especially in the variables reflected in the tracings of the history of titles, the vital, or should I say, mortality record of titles, the increasing life span of publication through the half century covered by the *Union List of Serials.* —*Elizabeth F. Norton, Head, Serials Department, University Research Library, University of California, Los Angeles.*

CHOICE's "Opening Day Collection"

Now Reprinted as a Special Supplement

OICE's "Opening Day Collection"—a list 1,776 books the editors of CHOICE feel uld be on the shelves of every academic ary when it opens its doors—is now being rinted as a Special Supplement. Developed h the help of William A. Pease and Richard ietz of the University of North Carolina, list was first published serially in 4 issues CHOICE in late 1965. The enthusiasm and tinuing demand which the list has since oyed prompts its reissue as a convenient arate supplement to CHOICE's regular nthly issues.

list is intended to be used as the essential ting point for a library's further acquisition and specialization. It has been particularly valuable to libraries in new colleges and junior colleges. Typical of comments received from users was the appreciation expressed by a junior college librarian confronted with the need to create seven "instant libraries" for a new system. "Thanks to CHOICE, we will have books for several thousand students when we open next fall."

The price of the "Opening Day Collection" Supplement is $5.00 per copy. Copies may be ordered directly from CHOICE by filling out and returning the coupon below. Checks should be made payable to the American Library Association.

OICE, a monthly publication of the Association of Colleges and Research Libraries, reviews and evaluates more than 5,000 new books of ortance to academic libraries every year. An annual subscription is 00; single copies are $2.00. Orders for subscriptions and single copies uld be sent to the Subscription Department, American Library Associa-, 50 East Huron Street, Chicago, Illinois 60611.

ou are not yet acquainted with CHOICE, a sample copy and other in-nation may be obtained by writing our Editorial Offices, 100 Riverview ter, Middletown, Connecticut 06457.

To order copies of the "Opening Day Collection," clip and mail this coupon:

CHOICE
100 Riverview Center
Middletown, Connecticut 06457

☐ Please send me _____ copies of the "Opening Day Collection" Special Supplement at $5.00 per copy.

☐ I enclose payment of $ _____ herewith.
(Make checks payable to American Library Association)

☐ Please bill my institution as given below:

INSTITUTION: _____

ADDRESS: _____
(street)

_____
(city) (state) (zip)

AUTHORIZED BY: _____
(signature)

"CONFIDENCE"

In Our Complete Periodicals Service

—American or foreign. All periodicals, handled with a degree of accuracy, second to none! Write for our Brochure—then ASK FOR REFERENCES from any one of the hundreds of Librarians taking advantage of our outstanding and accepted procedures—Specialists in the Special Library field. Send your list and ask for a quotation and recommendations.

"PROMPTNESS IS A TRADITION WITH McGREGOR"

—and Promptness is a mark of Experience, Trained Personnel, Ample Facilities, Proper Working Space, Financial Stability, Responsible Management, Completeness of Service, and Efficiency.

OUR 33RD YEAR

SUBSCRIBE TO McGREGOR PERIODICALS BULLETIN

McGREGOR *Magazine Agency*

MOUNT MORRIS ILLINOIS 61054

Largest Book Wholesaler!

BAKER & TAYLOR CO.

IN EACH OF OUR 3 MAJOR WAREHOUSES:
1,500,000 books... 100,000 different titles from 1,200 publishers... fastest, most complete and accurate book service.

EASTERN DIVISION
HILLSIDE, N.J. 07205
Telephone: 201-923-3200
N.Y.C. Tel: BArclay 7-8470

WESTERN DIVISION
RENO, NEVADA 89502
380 Edison Way
Telephone: 702-786-6700

MIDWEST AND SOUTHERN DIVISION
MOMENCE, ILLINOIS 60954
Telephone: 815-472-2444
Chicago Tel: 346-4074

INTERSTATE LIBRARY SERVICE CO.
A wholly-owned subsidiary
4600 N. Cooper
Oklahoma City, Okla. 73118
(405) JA 5-6561

BOOK INSPECTION CENTER:
The Baker & Taylor Co. of Texas, Inc.
1701 W. Gray St., Houston, Texas 77019

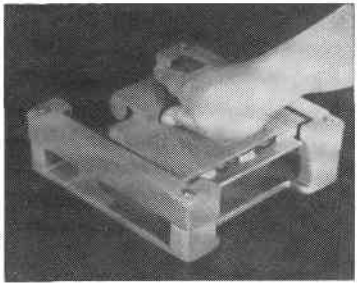

Catalogue Card Duplicator, to print library catalog card (3 × 5), $54.00.

Card Duplicator, to print library catalog card (3 × 5), post card (3½ × 5½) and 4 × 6 card, $64.50.

Living Stamp, to print call number, address, label, etc., $24.50.

All patented. Performance guaranteed.

With a new ink to dry in 10 minutes. Orders "On Approval" invited.

Please order direct from inventor:

Chiang Small Duplicators
53100 Juniper Rd.
South Bend, Indiana, U.S.A. 46637

PERIODICAL SUBSCRIPTIONS

We guarantee that all standing orders placed with us are renewed with the publishers at least eight weeks prior to expiration.

New subscription orders are processed promptly and accurately.

All claims for missing numbers receive careful attention.

Stechert-Hafner, Inc.

31 EAST 10TH STREET, NEW YORK, N.Y. 10003

ANNOUNCING

A computer compatible filing code

FOR: DOCUMENTALISTS • CATALOGERS • LIBRARIANS
PUBLISHERS • COMPUTER PERSONNEL

PRICE: $5.95

An important book for those using or contemplating use of computer information storage and retrieval systems. A workable filing code that makes it possible to deal with all catalog entries, even the most complex.

Written by Dr. Theodore C. Hines and Jessica L. Harris and sponsored by The Bro-Dart Foundation, *this new filing code* suggests actual steps for implementing filing rules for all bibliographic material dealt with on the computer. The code, wherever reasonable, makes the mechanical filing abilities of a computer compatible with accepted library procedures.

"COMPUTER FILING" includes a set of manual filing rules recommended for achieving the same arrangement with or without adoption of the computer code so that later conversion to computer based catalogs will be easier. Included, too, is an extensive filing example showing comparison of rules of the code with A.L.A. rules.

Address orders for Computer Filing of Index Bibliographic and Catalog Entries to:

The Bro-Dart Foundation

Dept. LRT-1, 113 Frelinghuysen Avenue, Newark, New Jersey 07101

CUSHING-MALLOY, INC.

1350 North Main Street

ANN ARBOR, MICHIGAN

LITHOPRINTERS

known for

QUALITY—ECONOMY—SERVICE

Let us quote on your next printing

Expert Service on

MAGAZINE SUBSCRIPTIONS

for

ALL LIBRARIES

☆

Faxon's Librarians Guide

Available on request

☆

For the very best library subscription service—ask about our Till Forbidden Automatic Renewal plan.

☆

F. W. FAXON CO., INC.

515-525 Hyde Park Ave.
Boston, Mass. 02131

☆

Continuous Service to Libraries Since 1886

Are *YOU*

a member

of ALA?

Join for 1967!

Write:
Membership Promotion
American Library Association
50 East Huron Street
Chicago, Illinois 60611

UN

PUBLICATIONS

UNITED NATIONS publishes books, studies, monographs, pamphlets, surveys, periodicals and reference works on many subjects, including international trade, world and regional economies, international law, social questions, human rights, and other questions of international importance.

Write for the following catalogues:

United Nations Publications	1945-63
United Nations Publications	1964
United Nations Publications	1965
Official Records Catalogue	1948-62
Publications des Nations Unies	1964
Publicaciones de las Naciones Unidas	1945-64

UNITED NATIONS PUBLICATIONS, NEW YORK/GENEVA

GALE ANNOUNCES REPRINTS OF BASIC REFERENCE WORKS IN LANGUAGE AND LITERATURE

Because they are widely recommended by Winchell, Walford, Northup, Zischka, and other authorities on reference books, Gale is making available once again the important publications described below.

Each title is being reprinted on acid-free paper—some call it "300-year paper"—and attractively bound in strong cloth to enable it to withstand the hard usage it is bound to have.

THE BIBLIOGRAPHER'S MANUAL OF ENGLISH LITERATURE, *Containing an Account of Rare, Curious, and Useful Books, Published in or relating to Great Britain and Ireland, from the Invention of Printing; with Bibliographical and Critical Notices, Collations of the Rarer Articles, and the Prices at which They Have Been Sold*

Edited by William Thomas Lowndes

Lists about 50,000 works with author, title, place, date, and size, with occasional notes as to rarity, value, editions, reprints, etc., of principal works in Divinity, Ecclesiastical and Civil History, Biography, Voyages and Travels, Antiquities, Heraldry, Jurisprudence, Sciences, the Arts, etc. Volume 6 has an appendix of lists of publications of societies and printing clubs, books issued by private presses, lists of series, etc.

3,363 Pages 1869 Revision Six Volumes $97.50

A GLOSSARY OF WORDS, PHRASES, NAMES, AND ALLUSIONS IN THE WORKS OF ENGLISH AUTHORS, *Particularly of Shakespeare and His Contemporaries*

Edited by Robert Nares

The editors of the revision wrote that the original was "the best and most useful work we possess for explaining and illustrating the obsolete languages and the customs and manners of the sixteenth and seventeenth centuries. . . . It is quite indispensable to the readers of the literature of the Elizabethan period (and) a necessary companion to the dramatic writers." Revision includes notes on orthography and accentuation, critical observations on Shakespeare, proverbial sayings, and allusions to customs and persons.

981 Pages 1858 Revision $22.50

AN ANALYTICAL INDEX TO THE WORKS OF NATHANIEL HAWTHORNE *with a Sketch of His Life*

Edited by Evangeline M. O'Connor

New introduction by C. E. Frazer Clark, Jr.

4,000 entries of place names, characters, and ideas found in Hawthorne's writings, with references to the volume and chapter in which each appears. Short stories and articles are referenced by volume numbers and dates of periodicals in which they appeared.

294 Pages 1882 $6.00

THE WAVERLEY DICTIONARY: *An Alphabetical Arrangement of All the Characters in Sir Walter Scott's Waverley Novels with a Descriptive Analysis of Each Character, and Illustrative Selections from the Text*

Edited by May Rogers

1,500 entries chronologically arranged in the order of publication of Scott's major novels. Each is given a short description of its setting and its historic context, with brief sketches of each of the characters, with exact chapter references, along with excerpts from the texts and a final synopsis of the plot. General index.

357 Pages 1855 $16.00

PARODY ANTHOLOGY

Edited by Carolyn Wells

A collection of over 200 parodies of famous poems, nursery rhymes, Christmas carols, popular songs, and standard themes in literature. A ten-page introduction describes the nature, history, purpose, and types of parody, and the better-known writers of parody. Three indexes list titles, parody authors, and authors parodied.

397 Pages 1904 $13.75

DICTIONARY OF OBSOLETE AND PROVINCIAL ENGLISH, *Containing Words from the English Writers Previous to the Nineteenth Century which are No Longer in Use or are Not Used in the Same Sense, and Words which are Now Used Only in the Provincial Dialects*

Edited by Thomas Wright

Defines thousands of obsolete words used from the fourteenth to the nineteenth century. Covers Anglo-Saxon and Anglo-Norman terms; Latin words introduced in the sixteenth and seventeenth centuries; words adopted from other languages; and words fashionable at a particular period. Illustrated by quotations and often accompanied by notes on orthography and provenance.

1,048 Pages 1866 Two Volumes $23.00

THE CYCLOPEDIA OF ANECDOTES OF LITERATURE AND THE FINE ARTS . . .

Edited by Kazlitt Arvine

Arranged topically in 289 sections, each devoted to a general subject such as age, author eccentricities, bibliomania, critics, friendship, and literary clubs, with more than 3,000 anecdotes from the lives and writings of those in the fine arts. Alphabetical index to individual personalities, subjects, and concepts.

698 Pages 1851 $14.50

A DICTIONARY OF SLANG, JARGON, AND CANT, *Embracing English, American and Anglo-Indian Slang, Pidgin English, Tinker's Jargon, and other Irregular Phraseology.*

Edited by Albert Barrere and C. G. Leland

Recognized as one of the authoritative works in the literature of slang. Eric Partridge points out in his new introduction to Gale's reprint of the original edition that ". . . it's a valuable piece of work, alert and instructive and readable. . . . Nobody studying slang could, indeed, afford to ignore it."

956 Pages 1889-90 Two Volumes $36.00

THE LITERATURE OF SLANG: A Bibliography

Edited by William Jeremiah Burke

A definitive bibliography of 2,000 works concerned with slang, cant, and dialect in the English and American languages, each carrying the compiler's comments on their scope and usefulness. Covers bibliographies; dictionaries; general works; underworld cant and its subsidiaries; occupational jargon; slang and jargon of sports, the theatre, the gambling world, and associated groups; war slang; school and college slang; dialects; and miscellaneous. Author index.

189 Pages 1939 $9.00

JOURNALISM: A Bibliography

Edited by Carl L. Cannon

A New York Public Library publication covering several thousand books and articles in English on the ethics of journalism as a career, history and law of freedom of the press, sensational journalism, interviewing techniques, the maintenance and use of the morgue, etc. Author index.

360 Pages 1924 $13.00

TRANSLATIONS OF GERMAN POETRY IN AMERICAN MAGAZINES, 1741-1810, *Together With Translations of Other Teutonic Poetry and Original Poems*

Edited by Edward Z. Davis

A chronologically-arranged bibliography of translations of German poetry, including many quotations, which appeared in American magazines during the eighteenth and nineteenth centuries.

229 Pages 1905 $8.00

A BIBLIOGRAPHICAL ACCOUNT OF ENGLISH THEATRICAL LITERATURE, *From the Earliest Times to the Present Day*

Edited by Robert William Lowe

In subject arrangement, Lowe's book is concerned with theatrical literature on subjects such as theatre as a business, a profession, and a medium of expression; its history; its noted managers; its actors and actresses as personalities and performers; and acting as a profession.

384 Pages 1888 $14.00

Ask Us to Send Any or All of These Books for Your Examination—Without Obligation

GALE RESEARCH COMPANY
1400 Book Tower, Detroit, Michigan 48226

FOR LIBRARIES:

ONE SOURCE FOR ALL YOUR PAPERBOUND BOOKS

Free on request:

NEW • Our 27 page list of "RECOMMENDED PAPERBACKS FOR ELEMENTARY SCHOOLS"

• Bowker's PAPERBOUND BOOK GUIDE FOR HIGH SCHOOLS

• Bowker's PAPERBOUND BOOK GUIDE FOR COLLEGES

• Our circular: "One Source for Paperbacks" (lists publishers whose books we stock, time to allow for delivery, quantities needed for discount, etc.)

Now you can obtain in one order inexpensive copies of classics, as well as best-sellers, mysteries, westerns and other popular categories.

PAPERBOUND BOOK DISTRIBUTORS

(A division of Book Mail Service)
82-27 164th Street■Jamaica, New York 11432■Phone OL 7-4799

Now in our 17th year

standard's PERMALIFE®

The complete paper for the complete program

YOU CAN HAVE A WELL ROUNDED PRINTING, STORAGE and FILING PROGRAM when you use PERMALIFE, a Thorographic paper by Standard of Richmond. PERMALIFE is acid-free and absolutely dependable. A life of several hundred to a thousand and more years is assured.* Use PERMALIFE with confidence for

Library Catalog Card Stock
Envelopes for storage of documents and manuscripts
File folders for storage of maps and large documents
Letterheads
Reprints

PERMALIFE is beautiful in look and feel, and will give true copies by photo offset. PERMALIFE TEXT and PERMALIFE BOND are watermarked for your protection. For permanency use PERMALIFE and be sure.

*According to tests made of PERMALIFE by the W. J. Barrow Research Laboratory. Details upon request.

STANDARD PAPER MANUFACTURING CO.
RICHMOND, VIRGINIA

For Libraries That Want Quality Bookbinding

GLICK BOOKBINDING CORP.

Specialists in the Binding and Rebinding of Books and Periodicals

Serving Institutional, Public And Research Libraries

Since 1905

32-15 37th Avenue
Long Island City, New York 11101
784-5300

In Nassau and Suffolk
Area Code 516 483-9534

In New Jersey
Area Code 201 642-5374